#0012

Press Ctrl + L to View in Full-Screen Mode

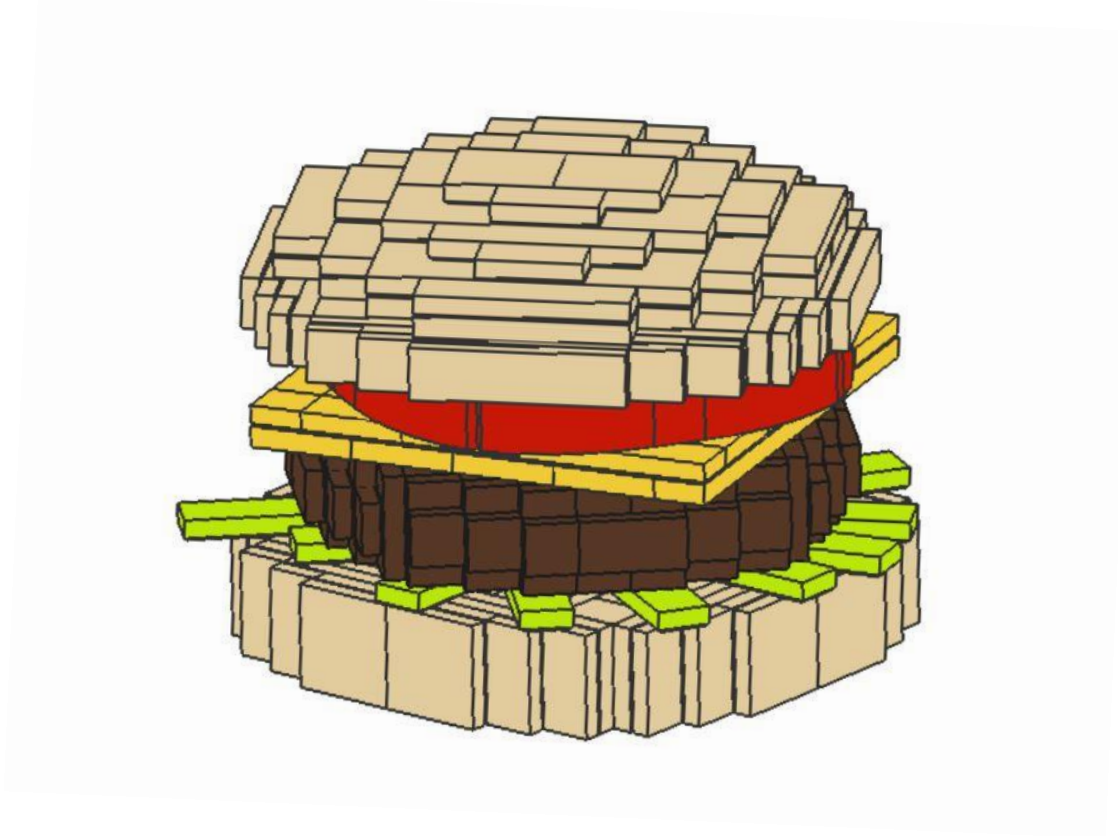

Cheeseburger (1:1)

Building Instructions

by

Cole Edmonson

©2014, Cole Edmonson

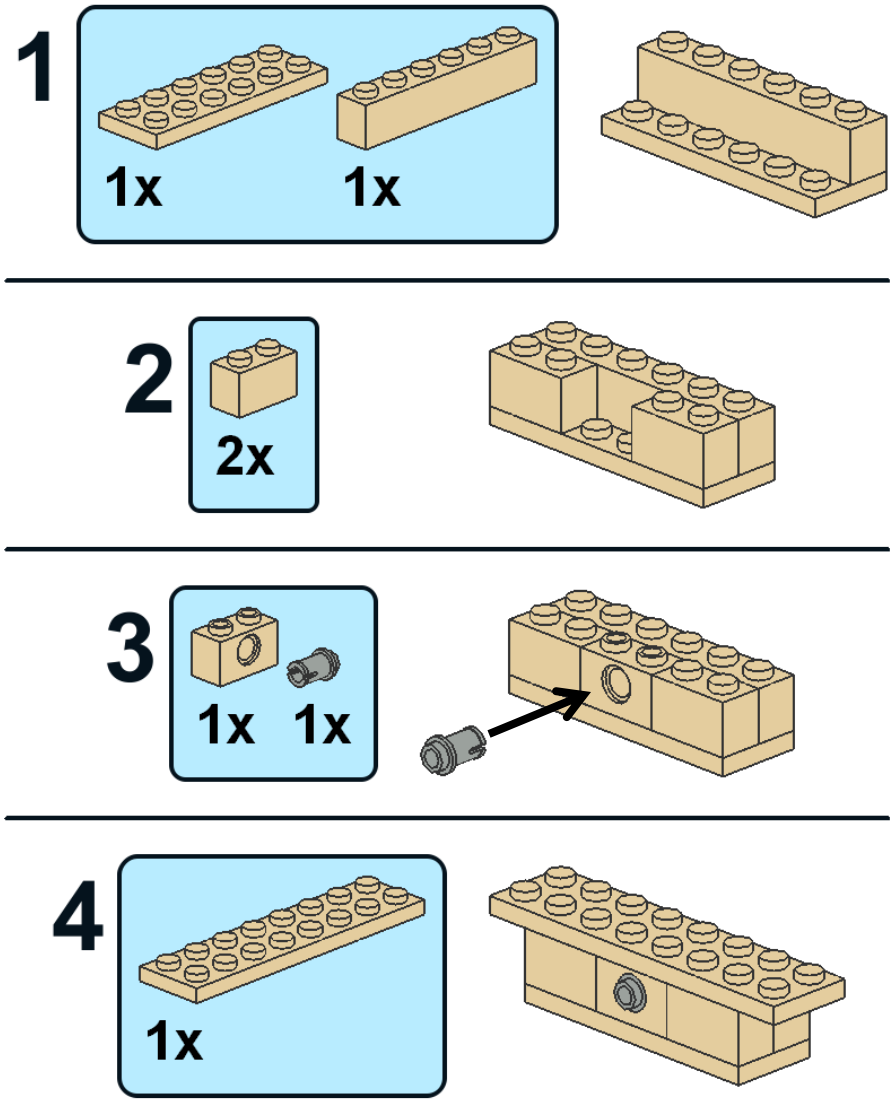

©2014, Cole Edmonson

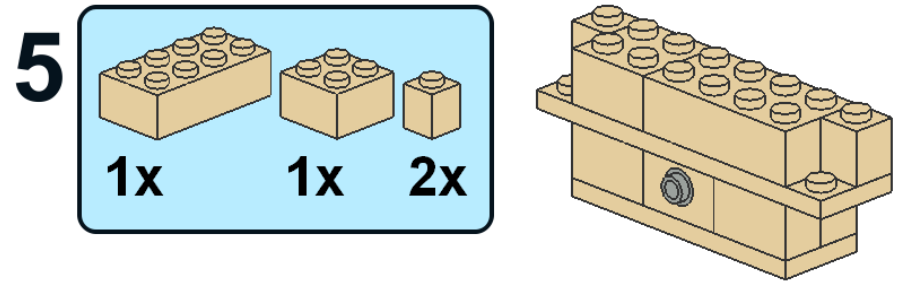

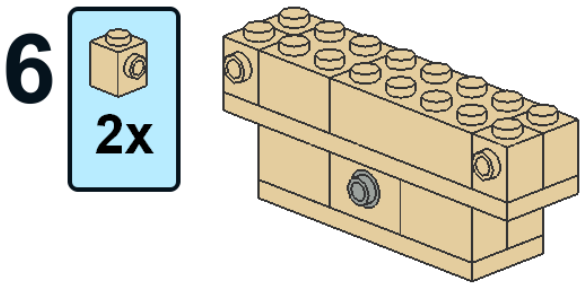

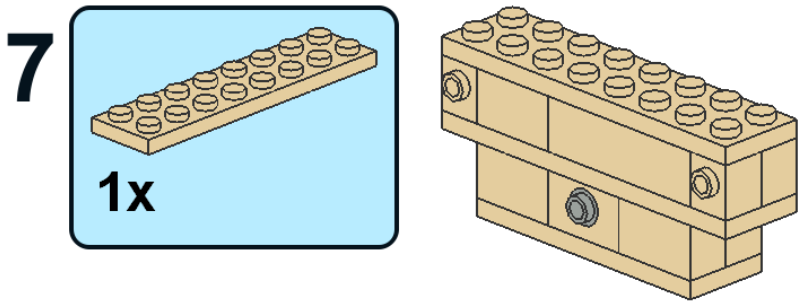

©2014, Cole Edmonson

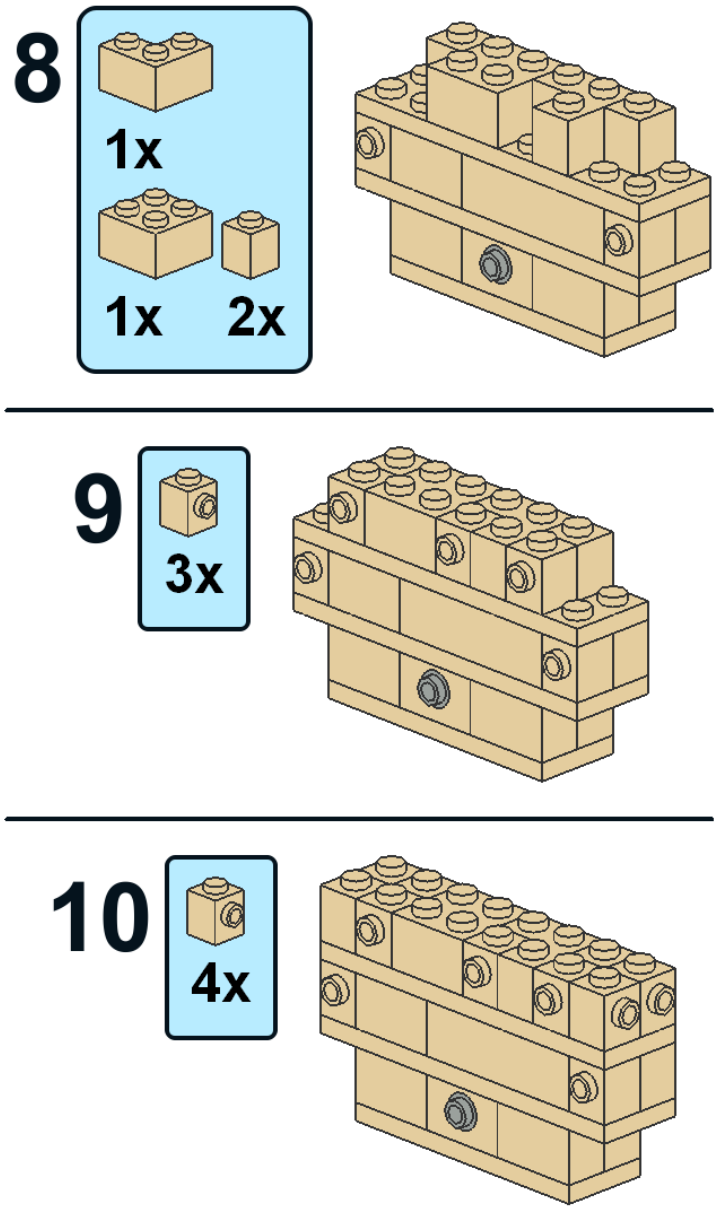

©2014, Cole Edmonson

11

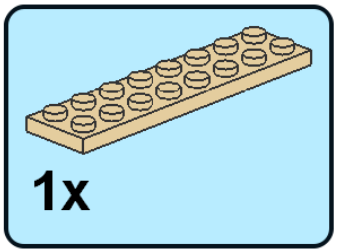

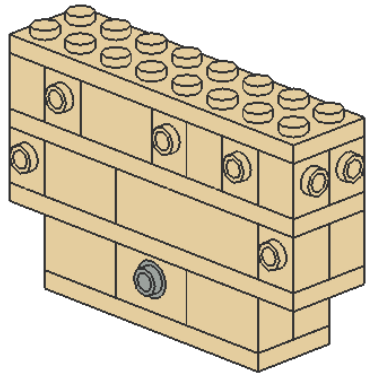

12

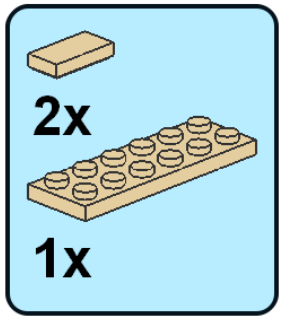

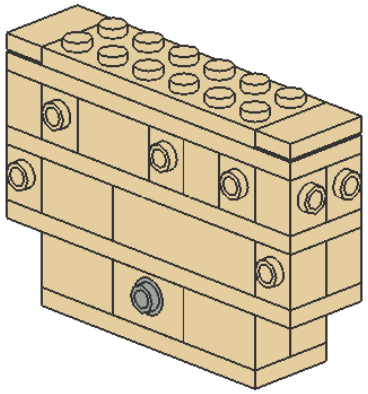

13

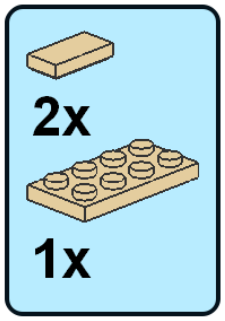

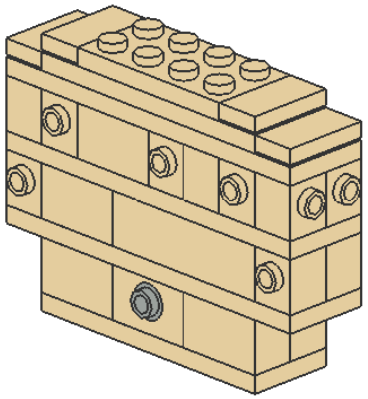

©2014, Cole Edmonson

14

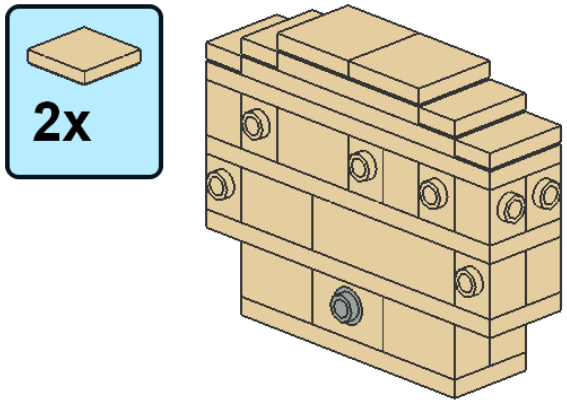

15

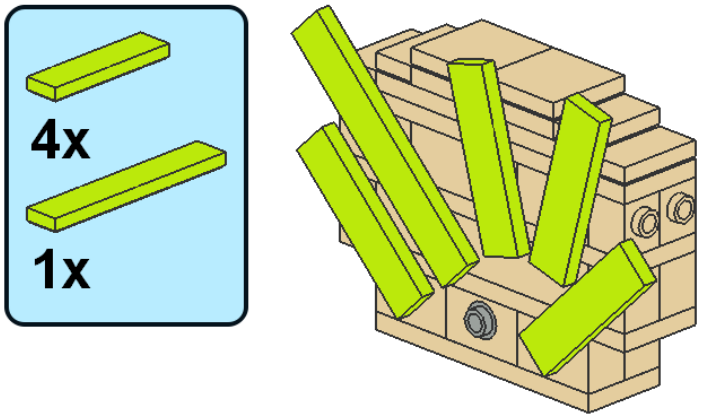

©2014, Cole Edmonson

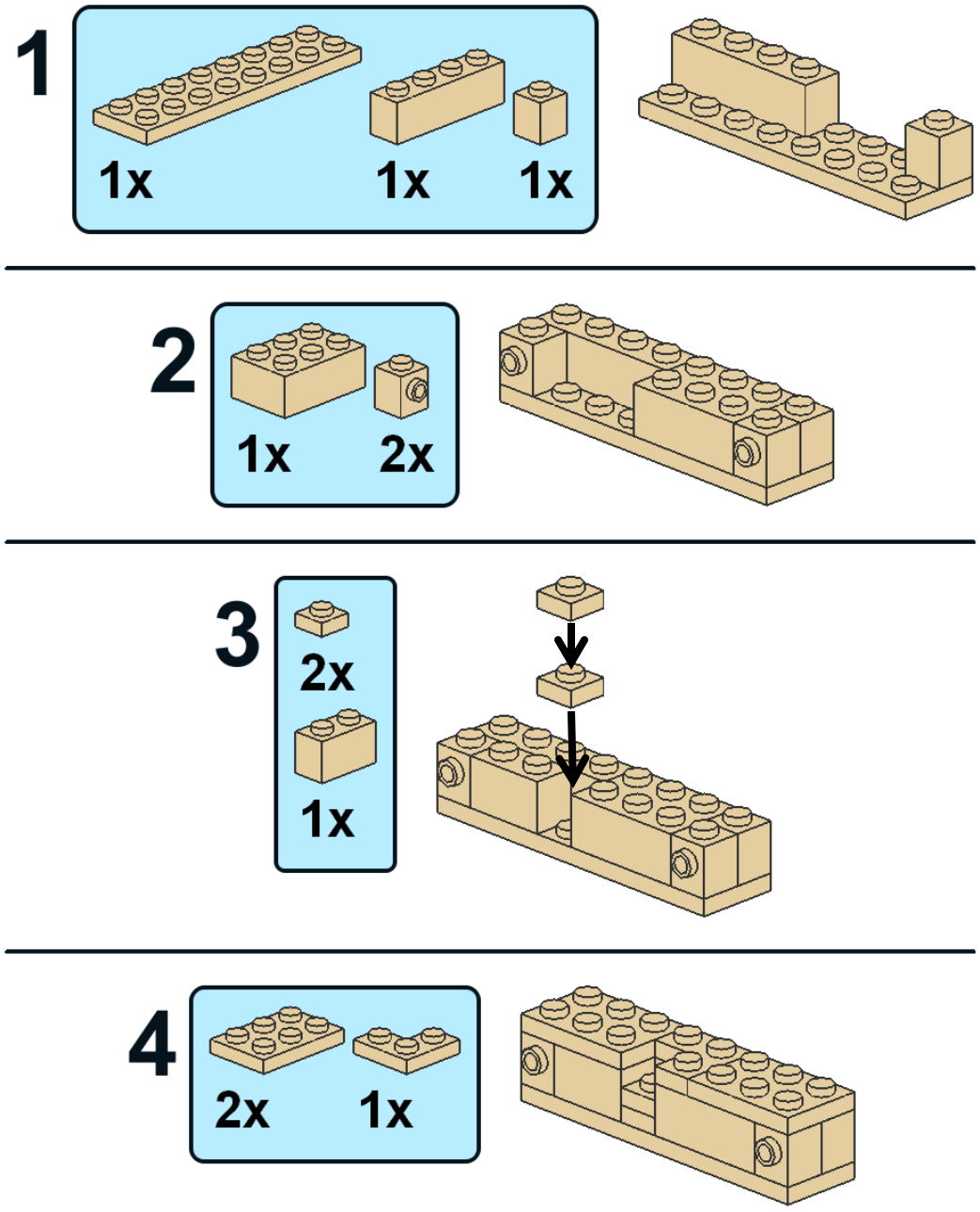

©2014, Cole Edmonson

5

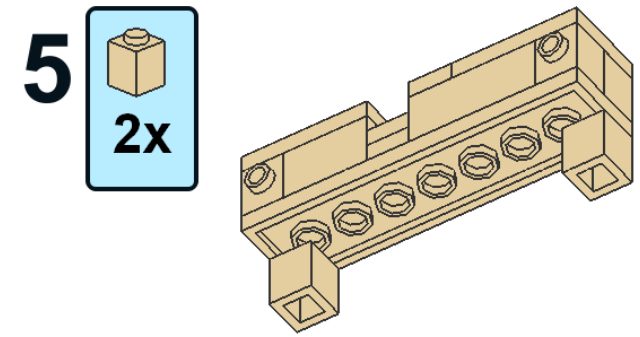

6

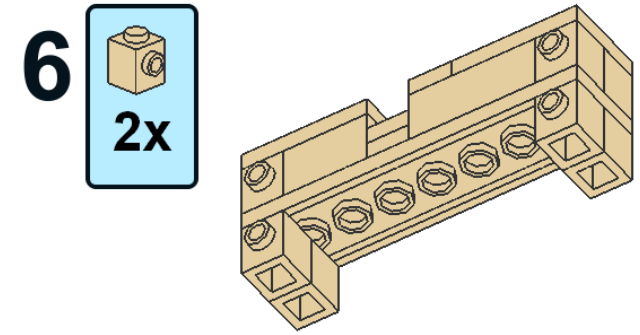

7

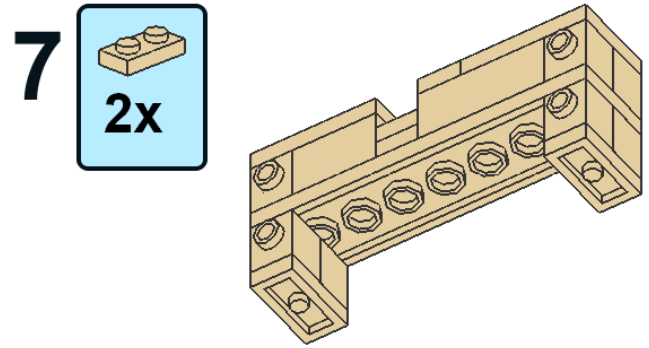

©2014, Cole Edmonson

8

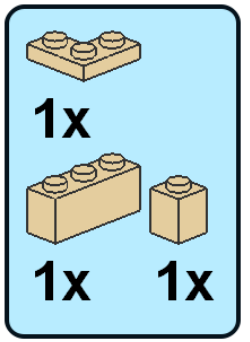

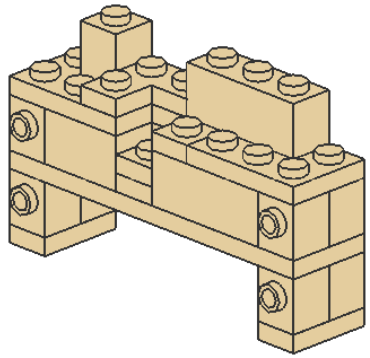

9

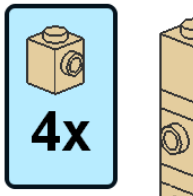

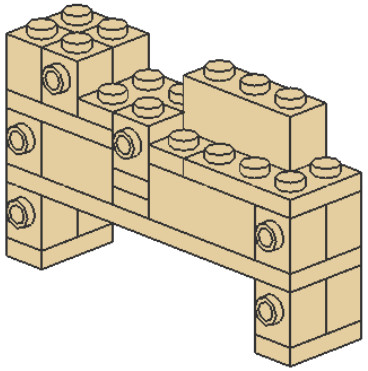

10

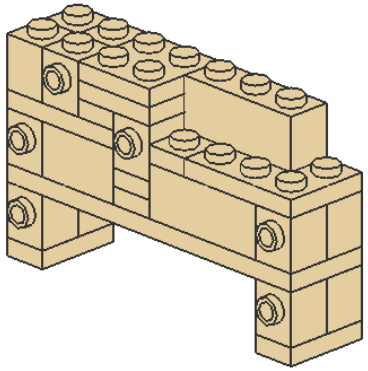

©2014, Cole Edmonson

11

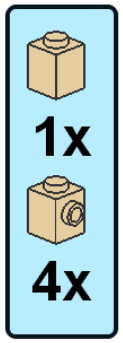

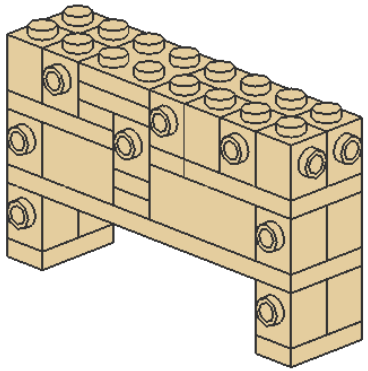

12

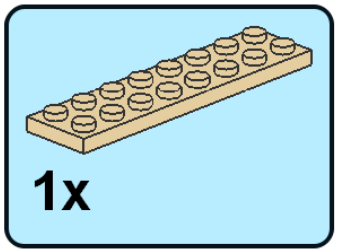

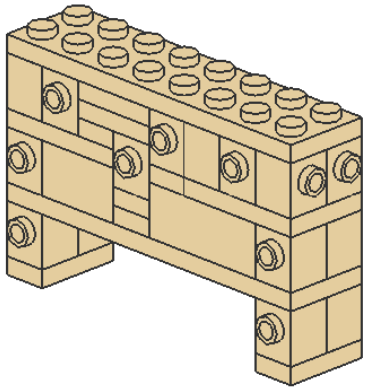

13

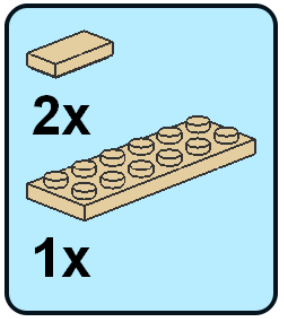

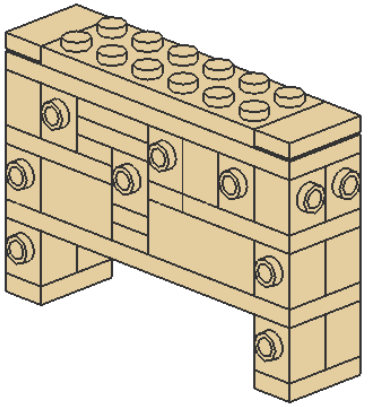

©2014, Cole Edmonson

14

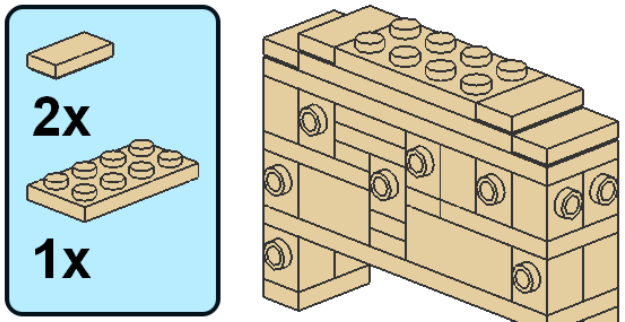

15

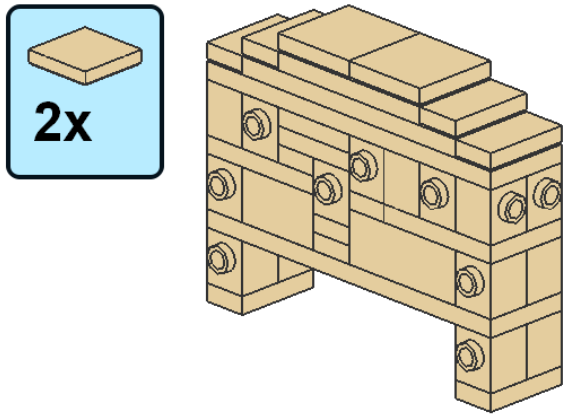

©2014, Cole Edmonson

16

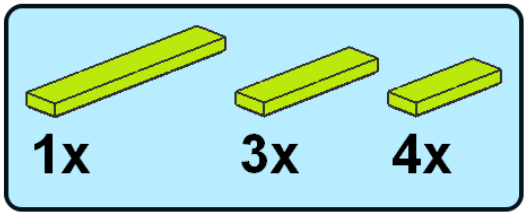

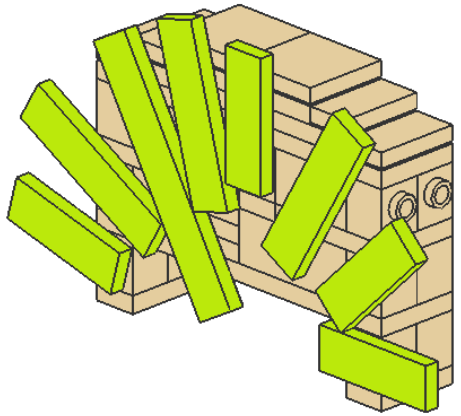

©2014, Cole Edmonson

16

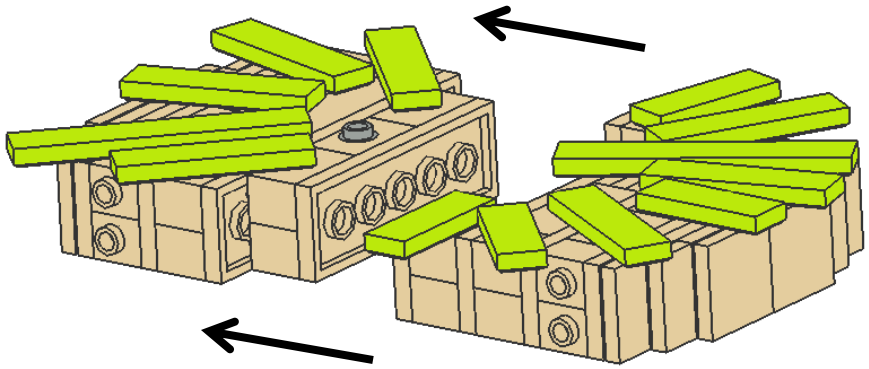

17

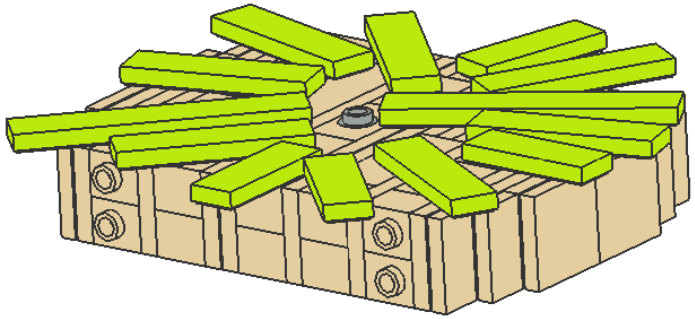

©2014, Cole Edmonson

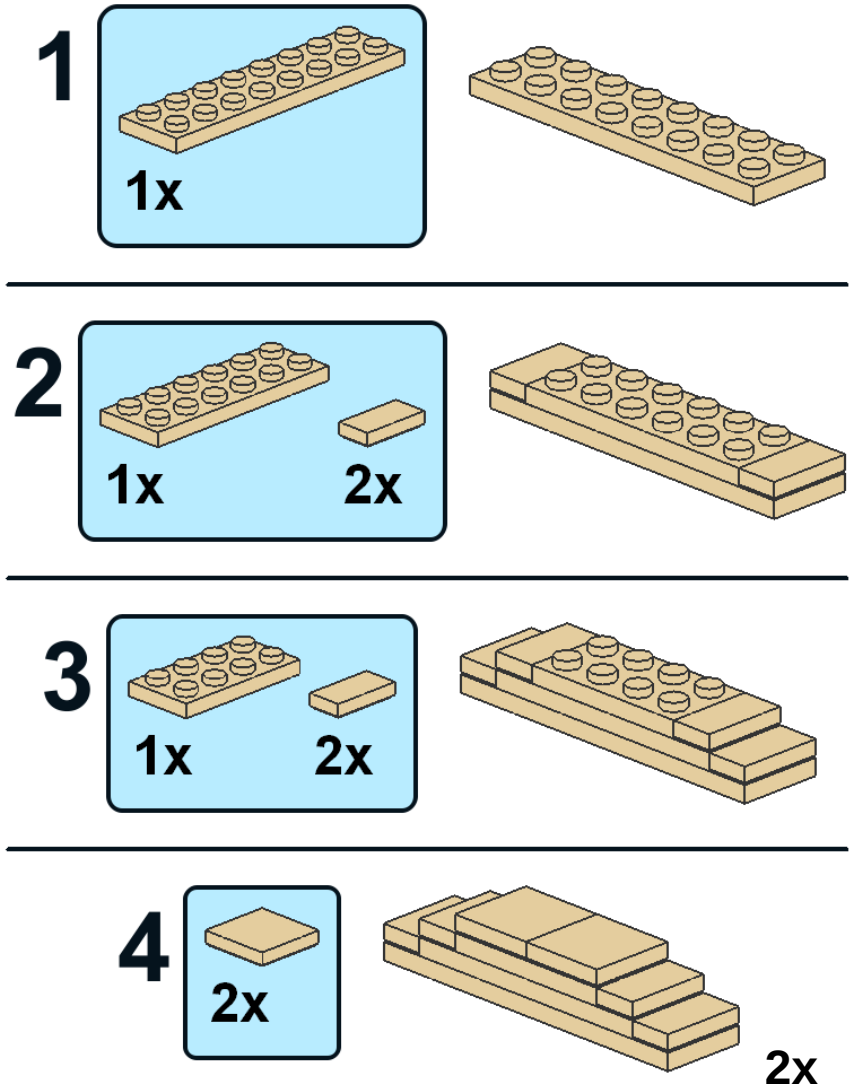

©2014, Cole Edmonson

18

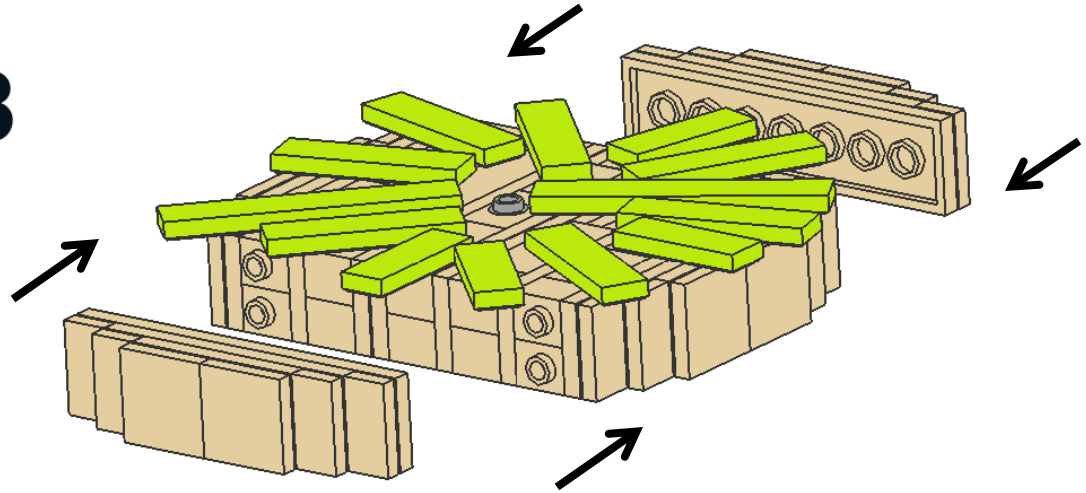

19

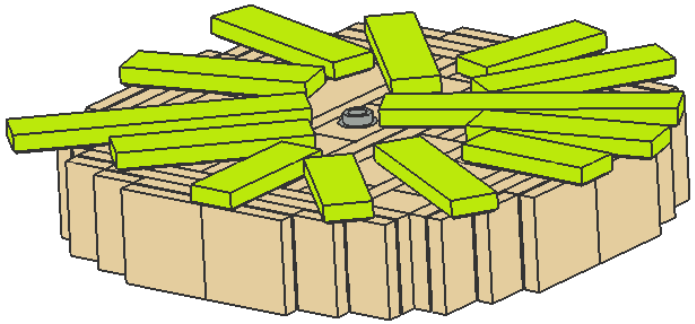

©2014, Cole Edmonson

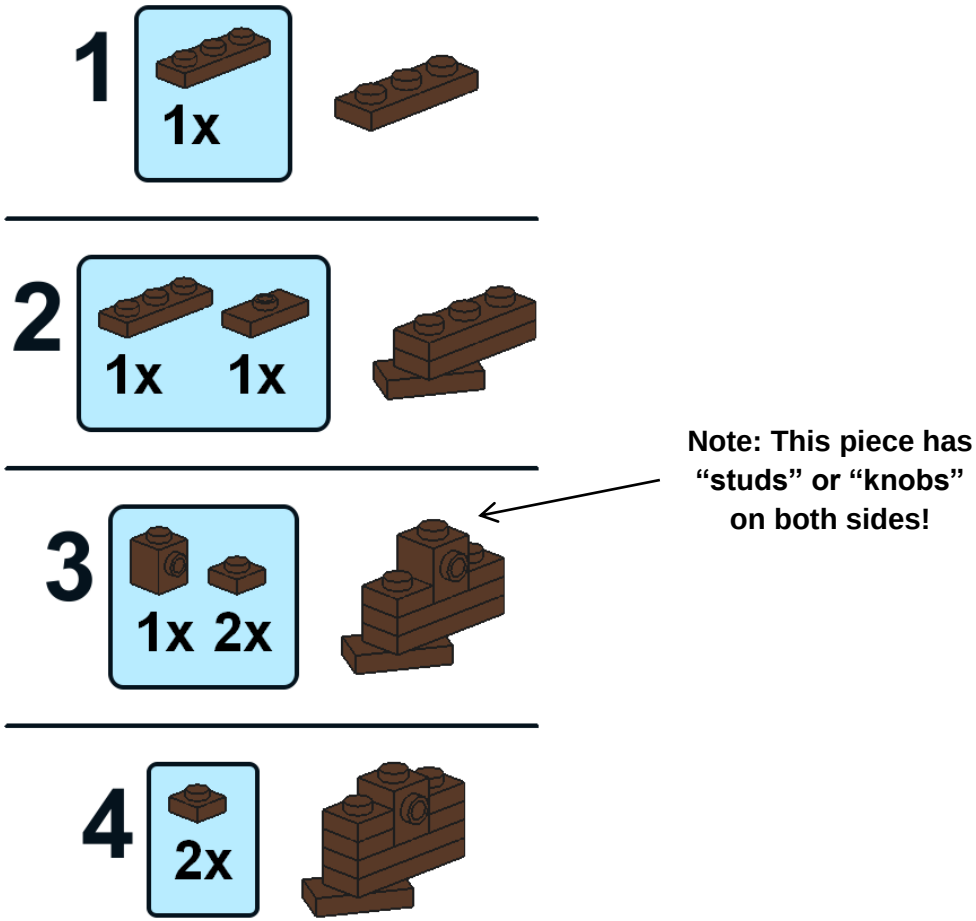

©2014, Cole Edmonson

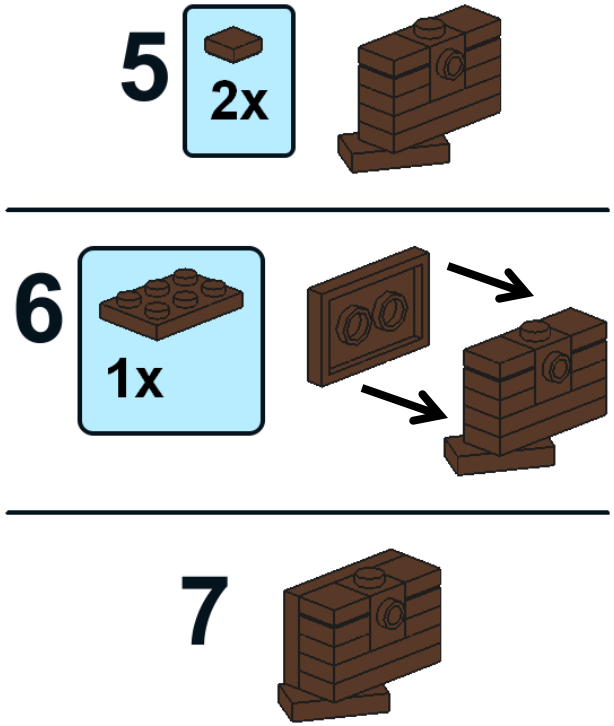

©2014, Cole Edmonson

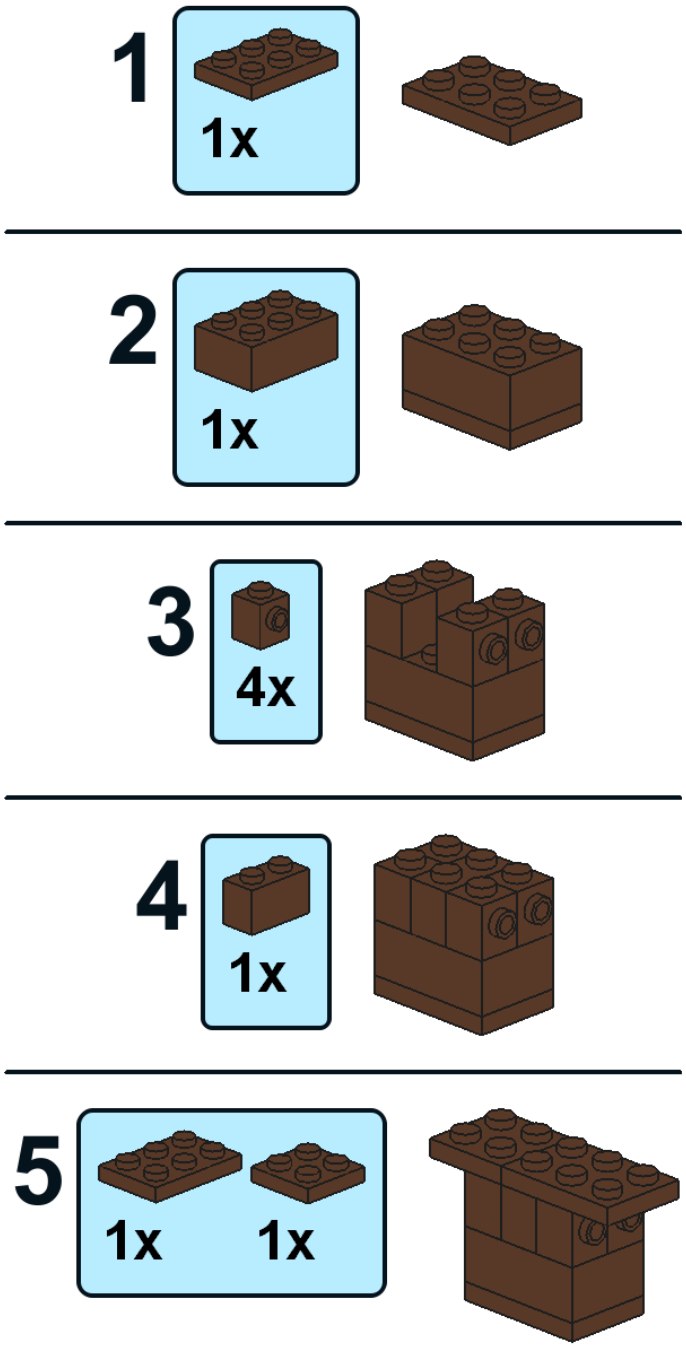

©2014, Cole Edmonson

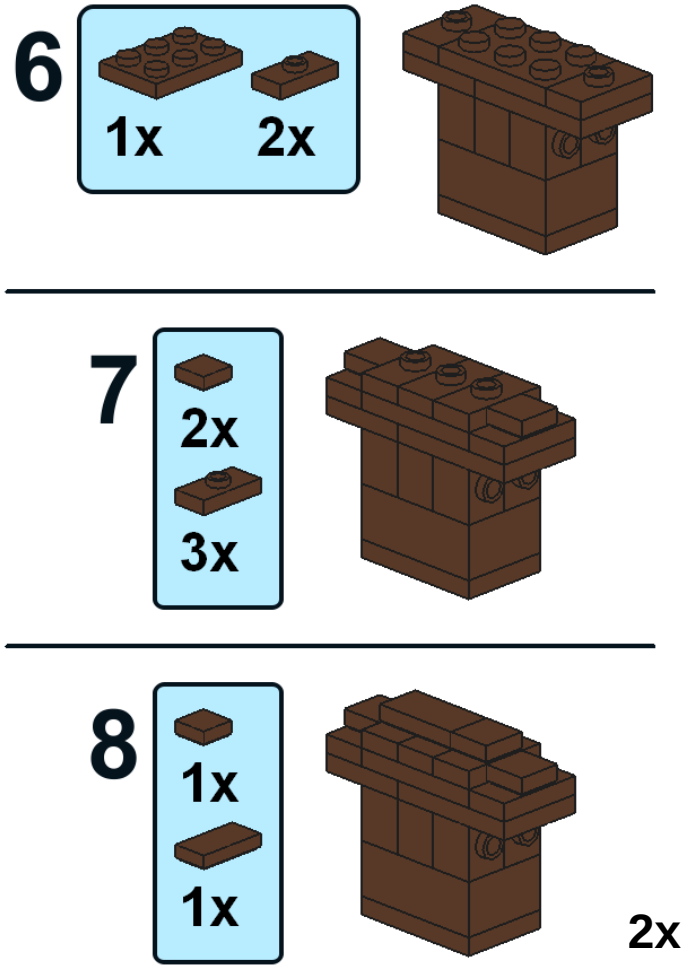

©2014, Cole Edmonson

8

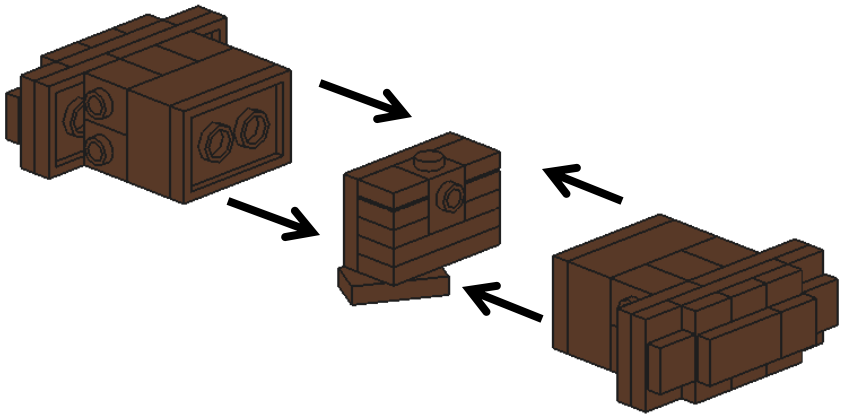

9

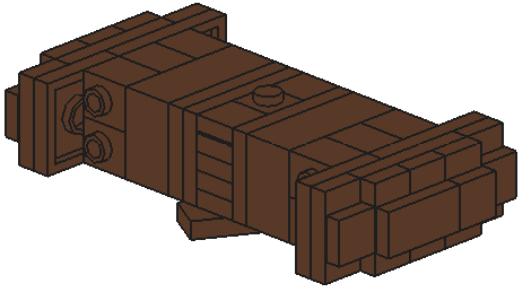

©2014, Cole Edmonson

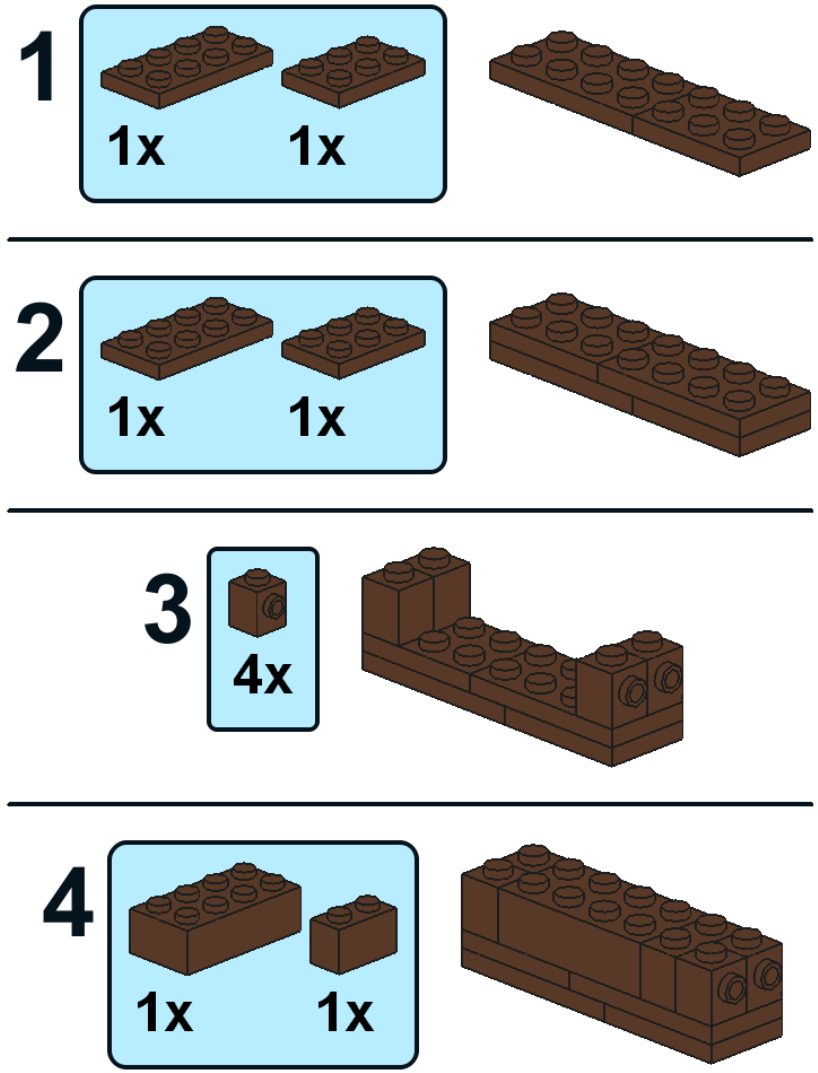

©2014, Cole Edmonson

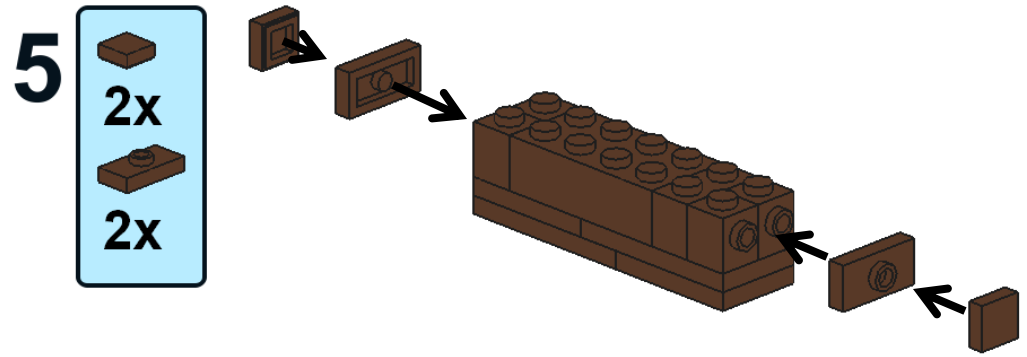

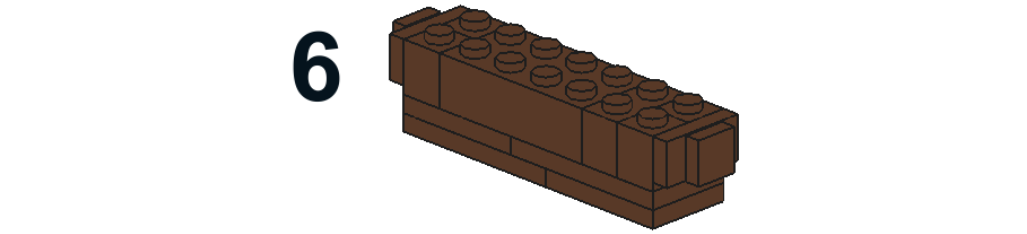

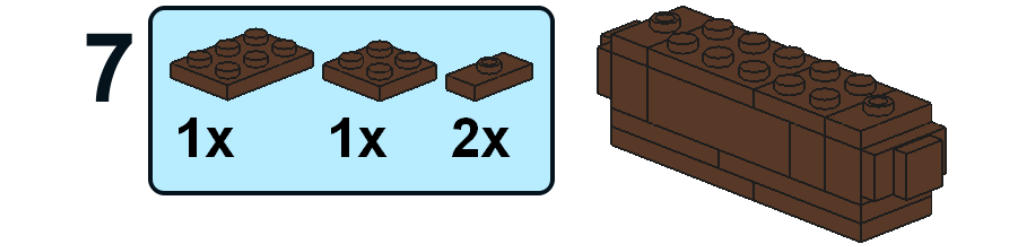

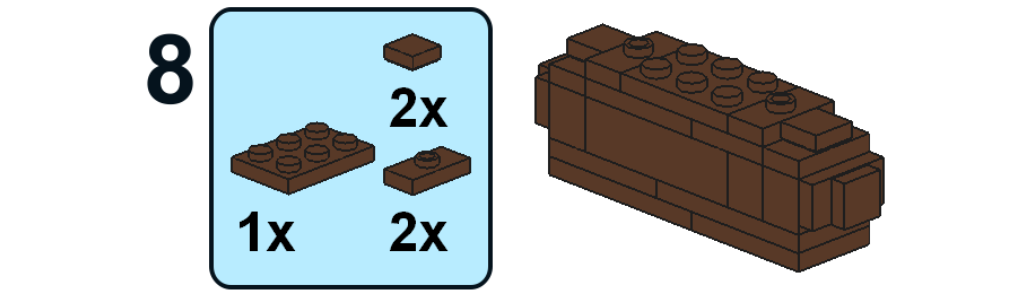

©2014, Cole Edmonson

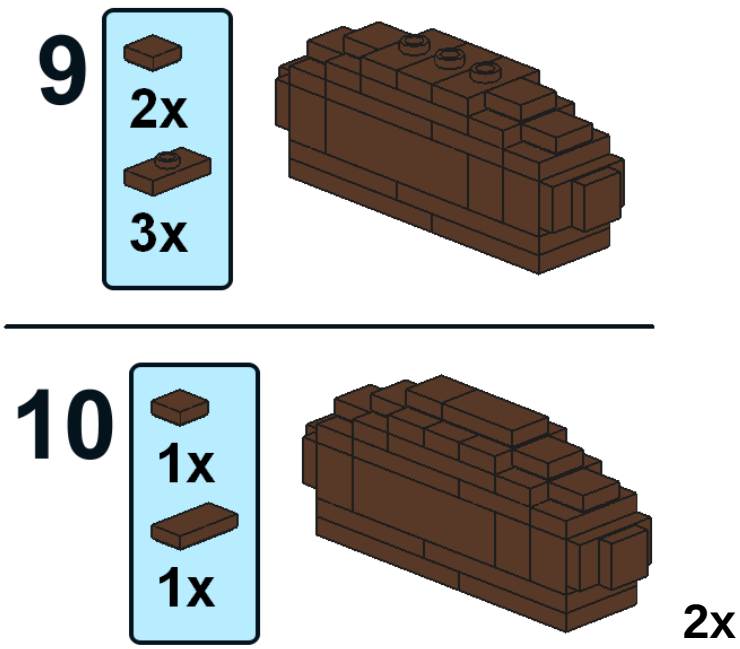

©2014, Cole Edmonson

10

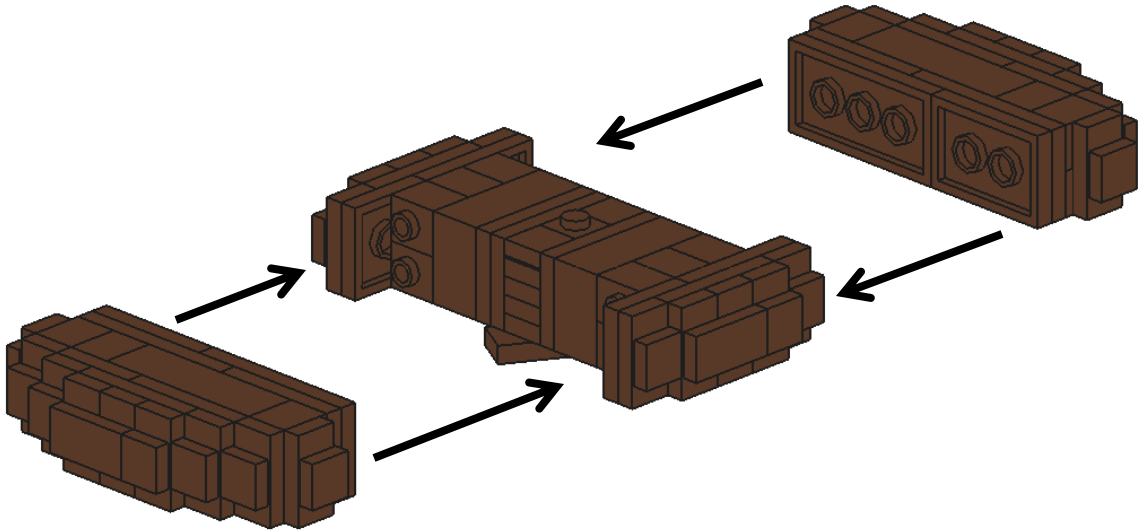

11

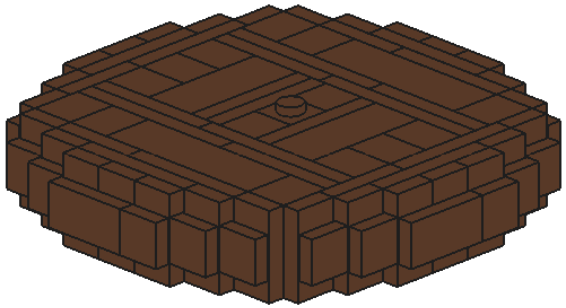

©2014, Cole Edmonson

20

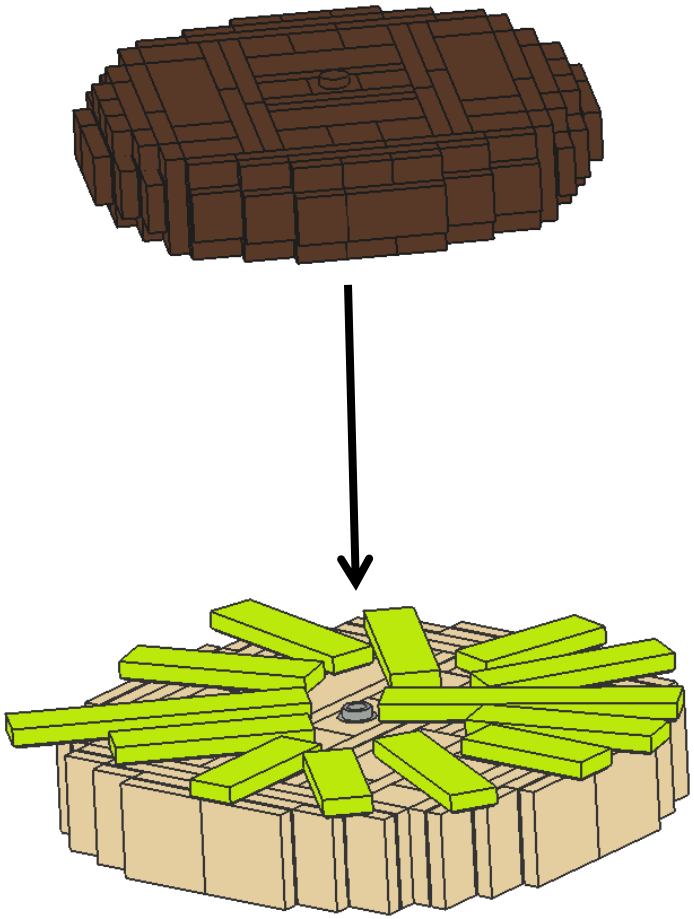

21

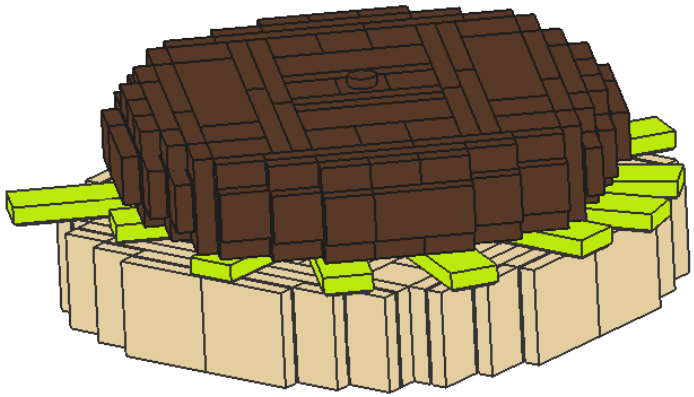

©2014, Cole Edmonson

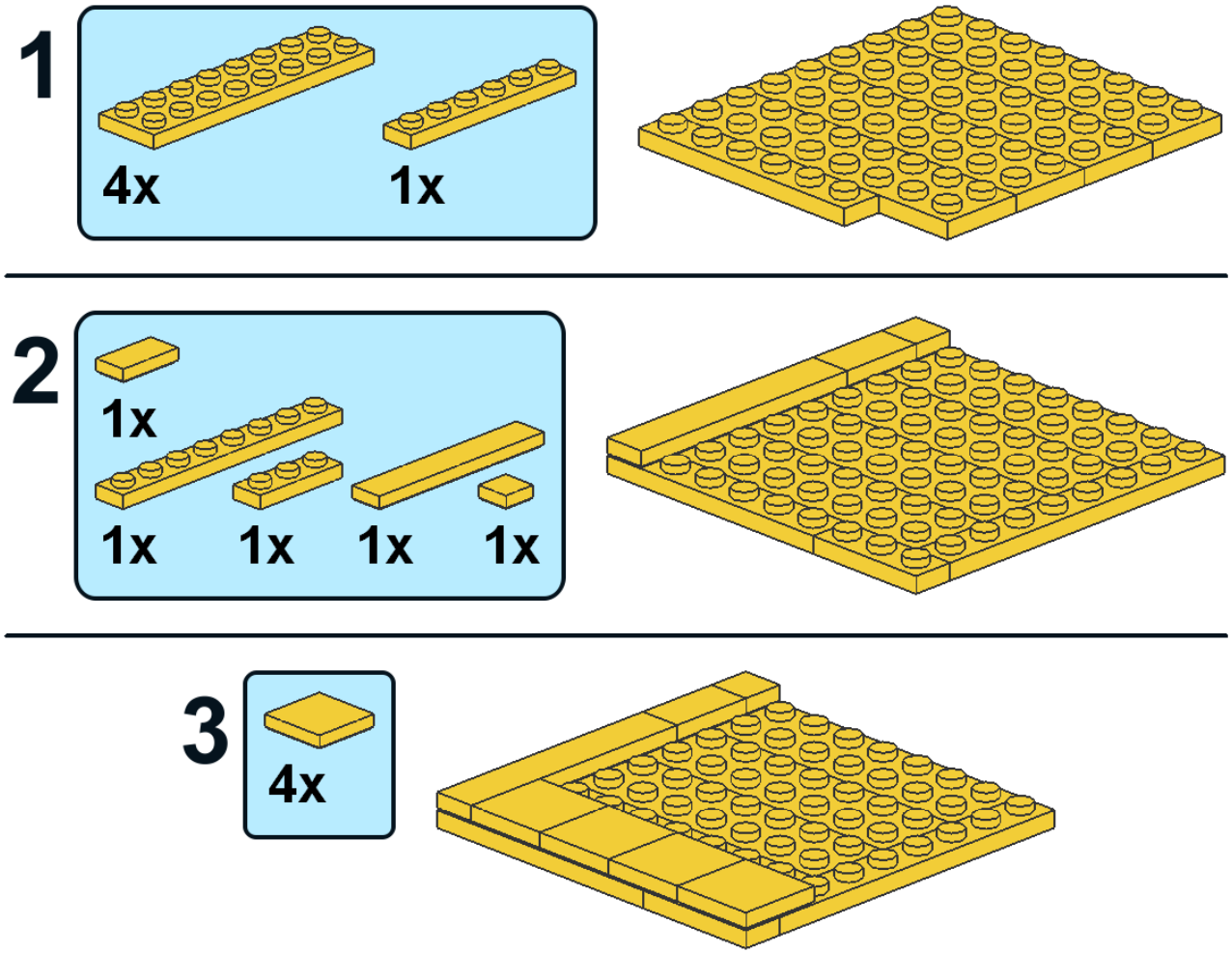

©2014, Cole Edmonson

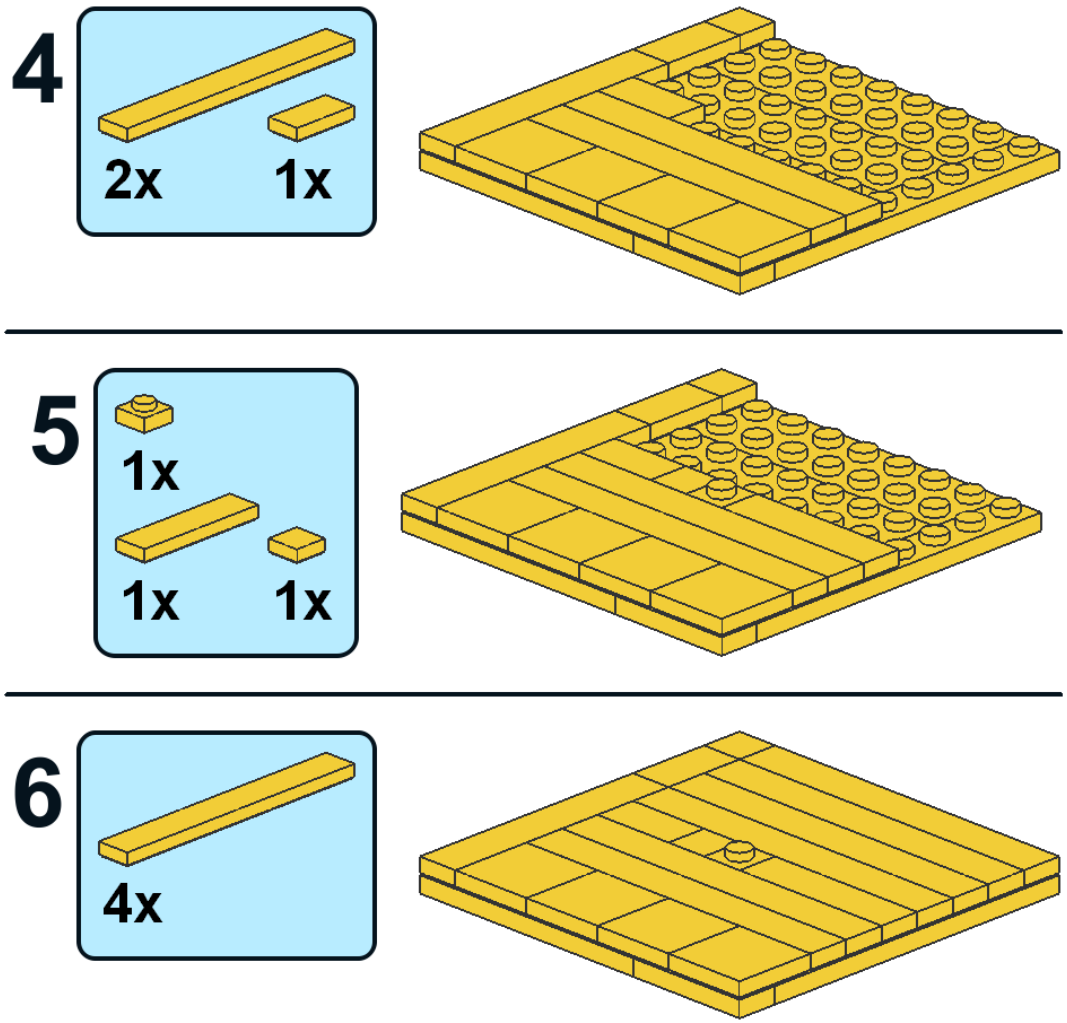

©2014, Cole Edmonson

22

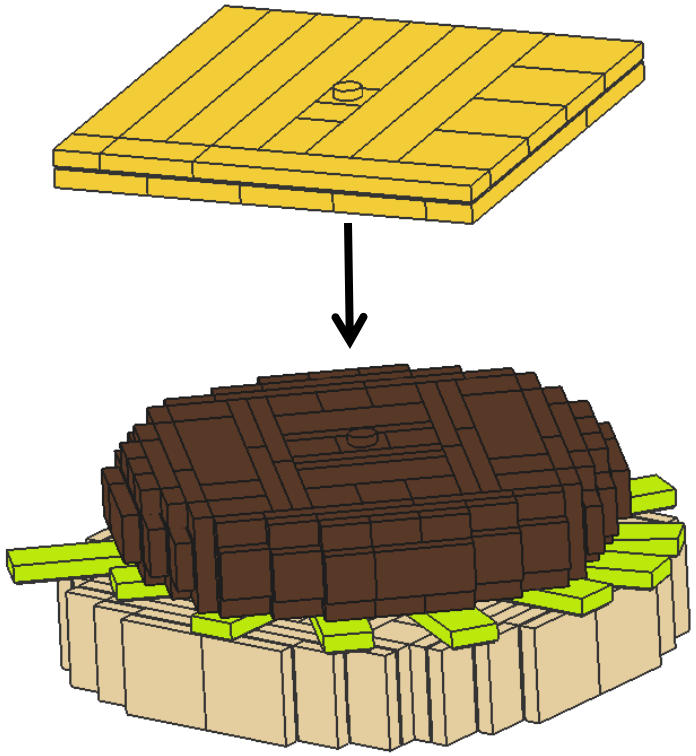

23

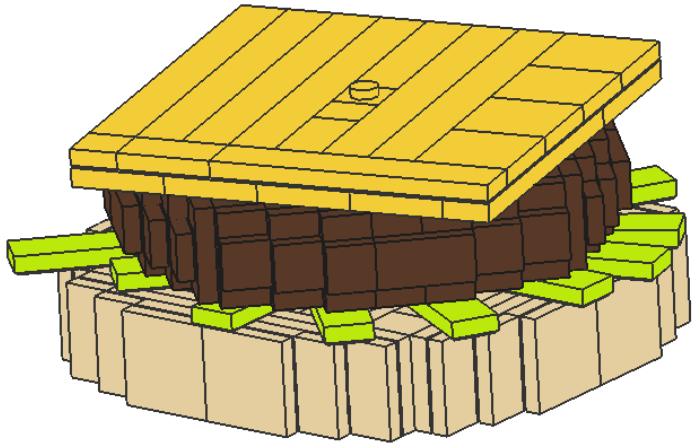

©2014, Cole Edmonson

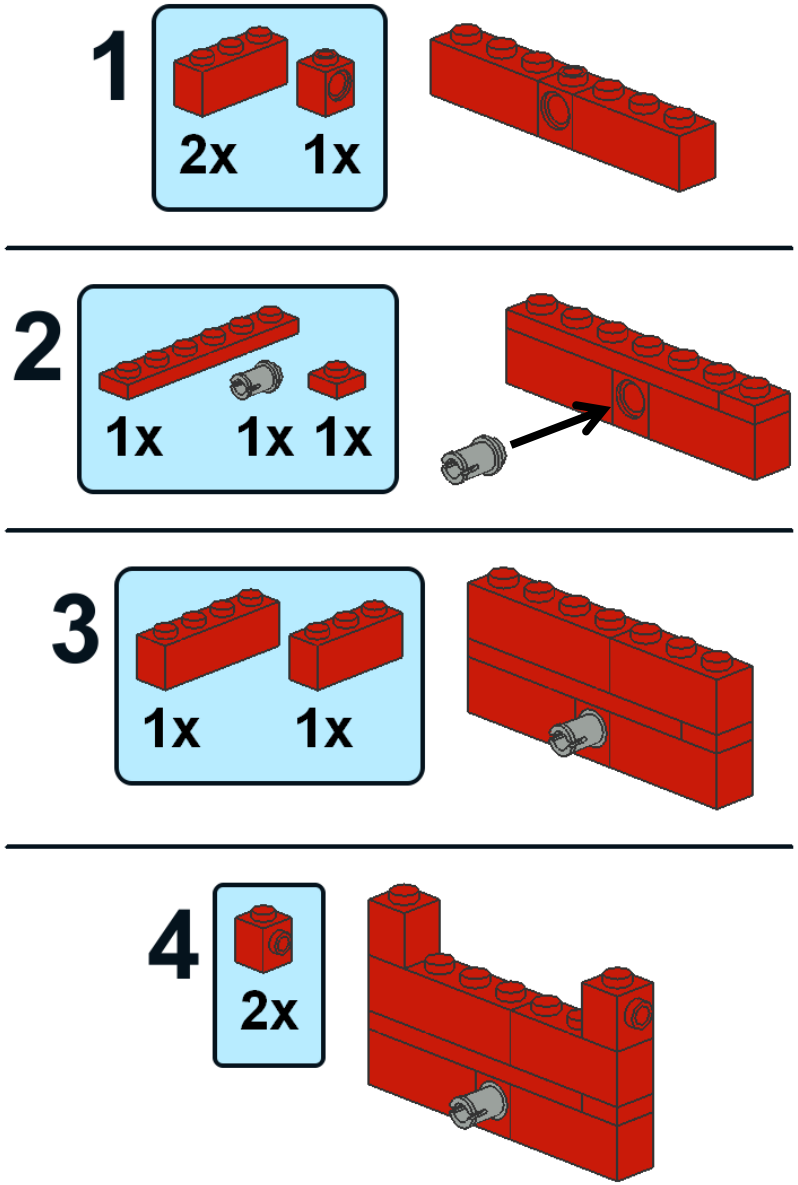

©2014, Cole Edmonson

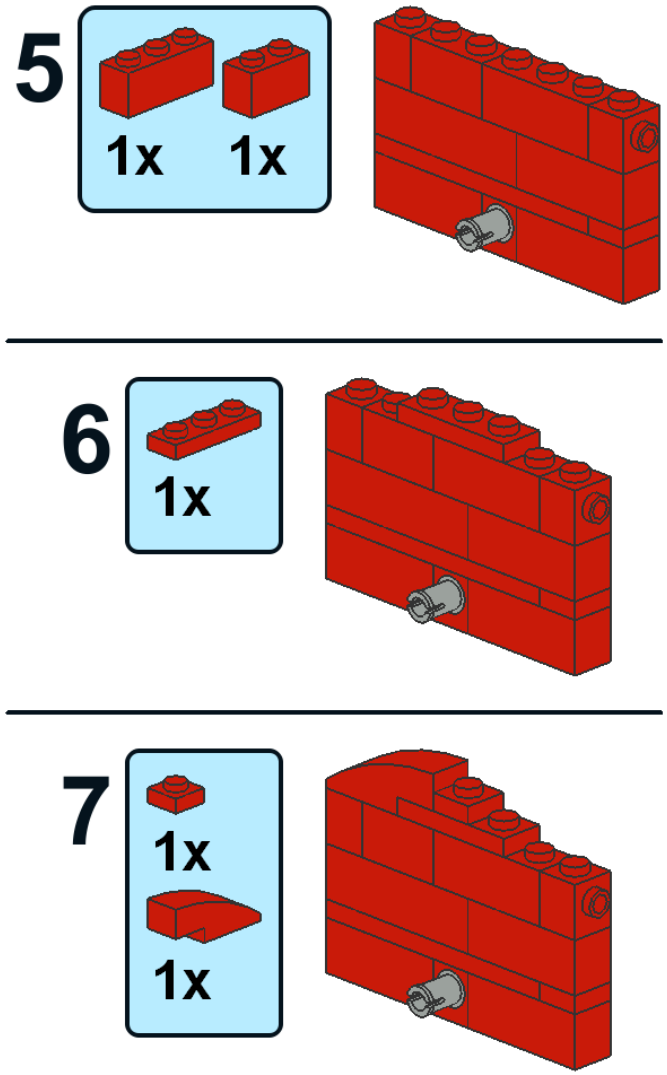

©2014, Cole Edmonson

8

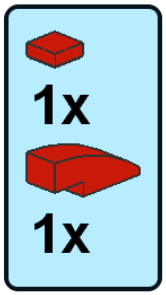

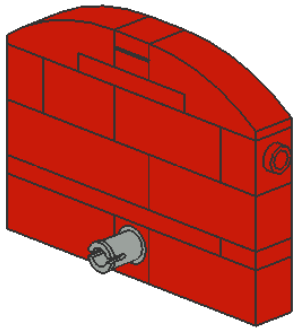

9

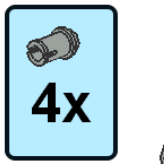

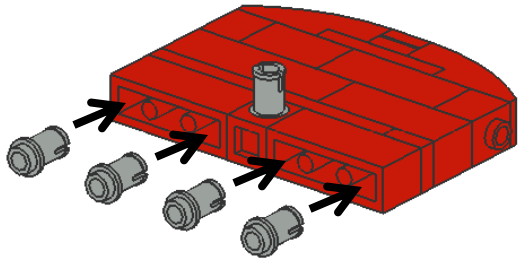

10

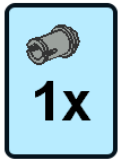

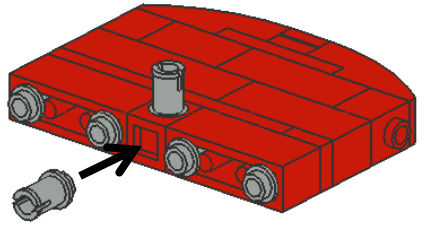

11

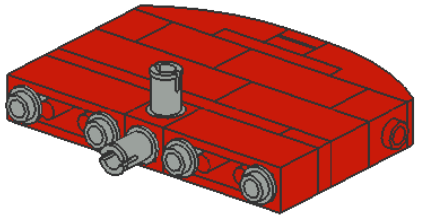

©2014, Cole Edmonson

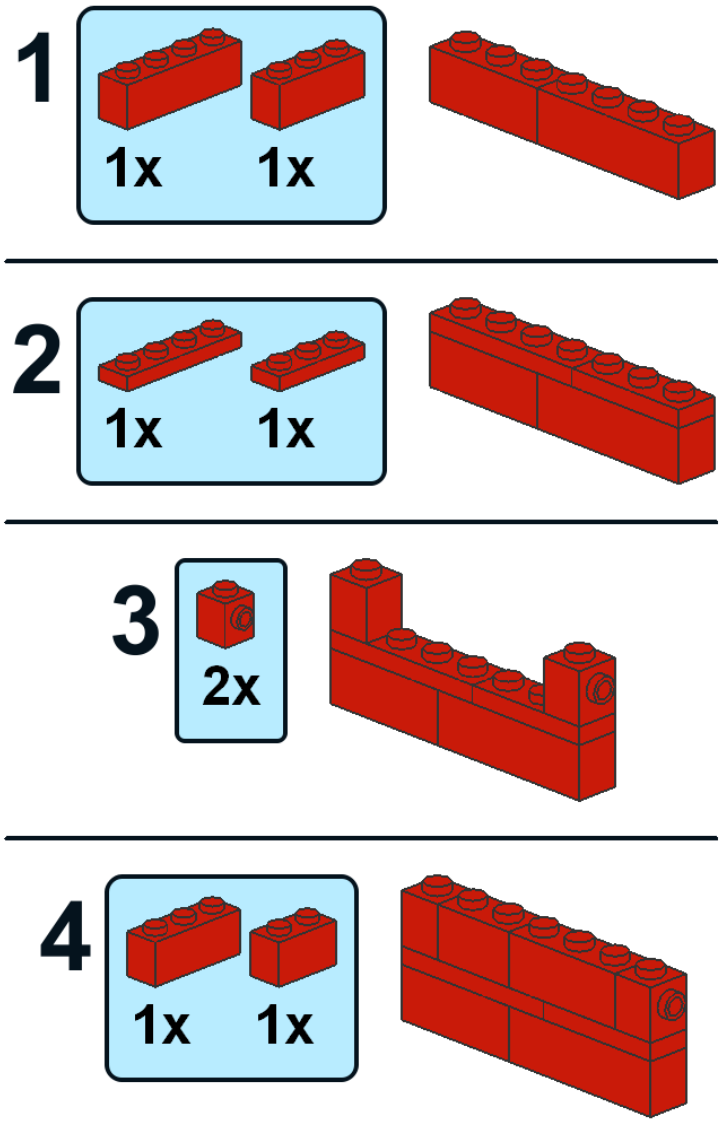

©2014, Cole Edmonson

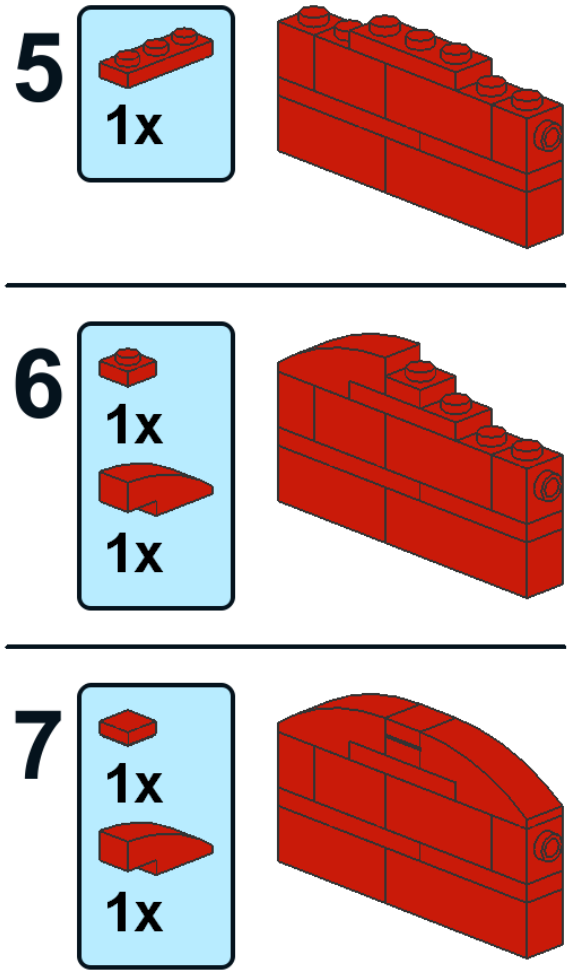

©2014, Cole Edmonson

12

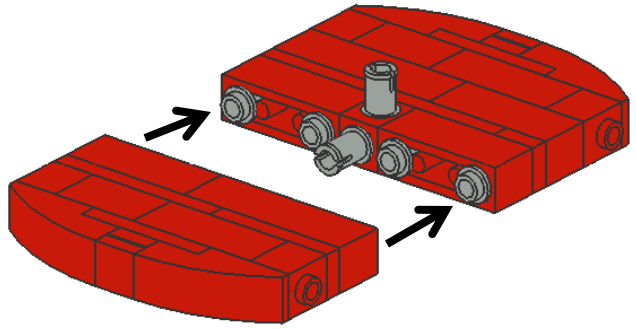

13

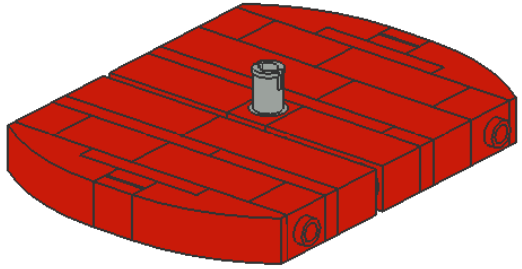

©2014, Cole Edmonson

14

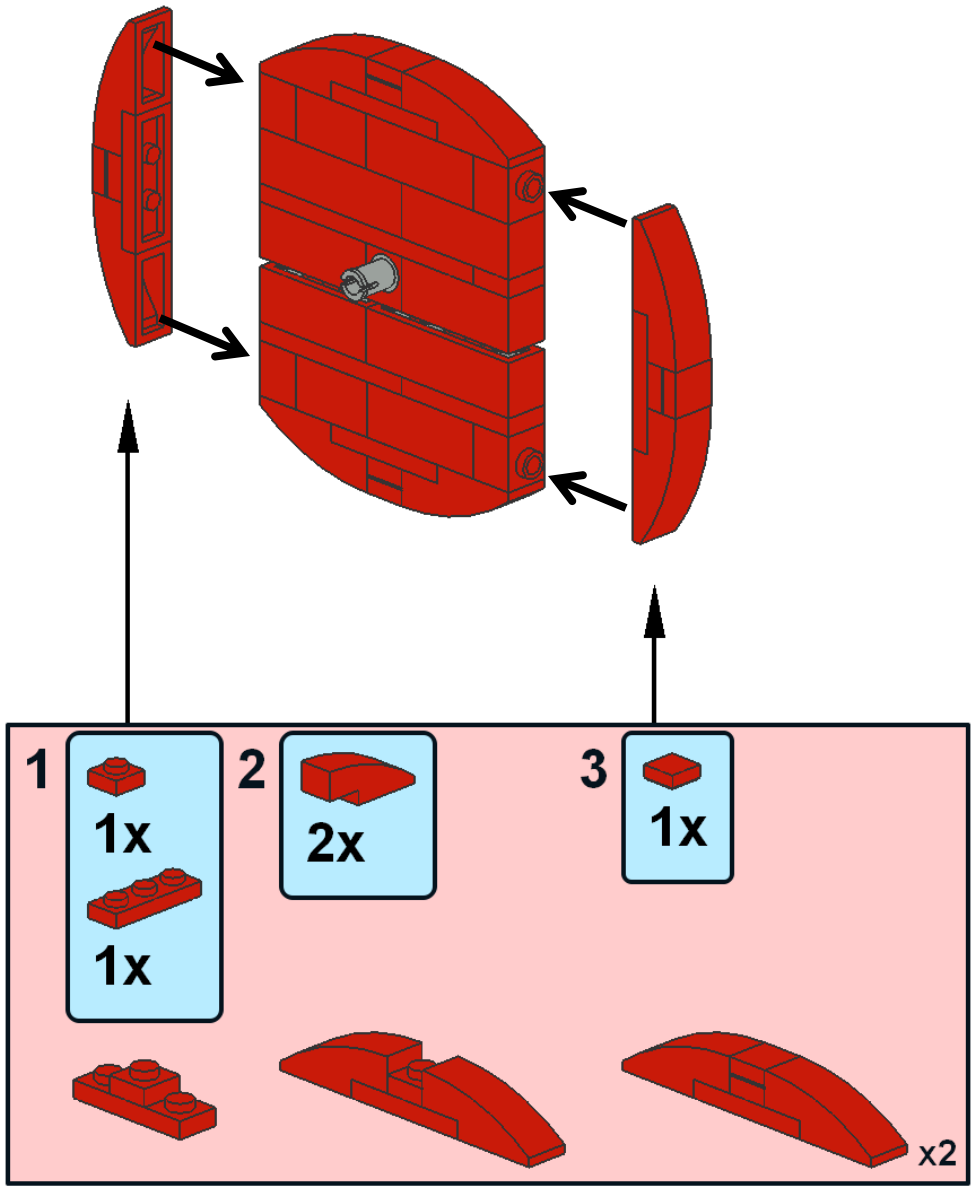

©2014, Cole Edmonson

15

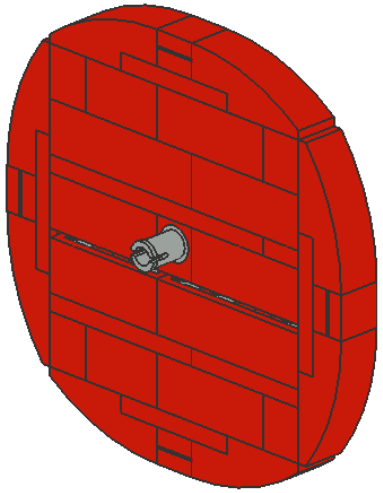

©2014, Cole Edmonson

24

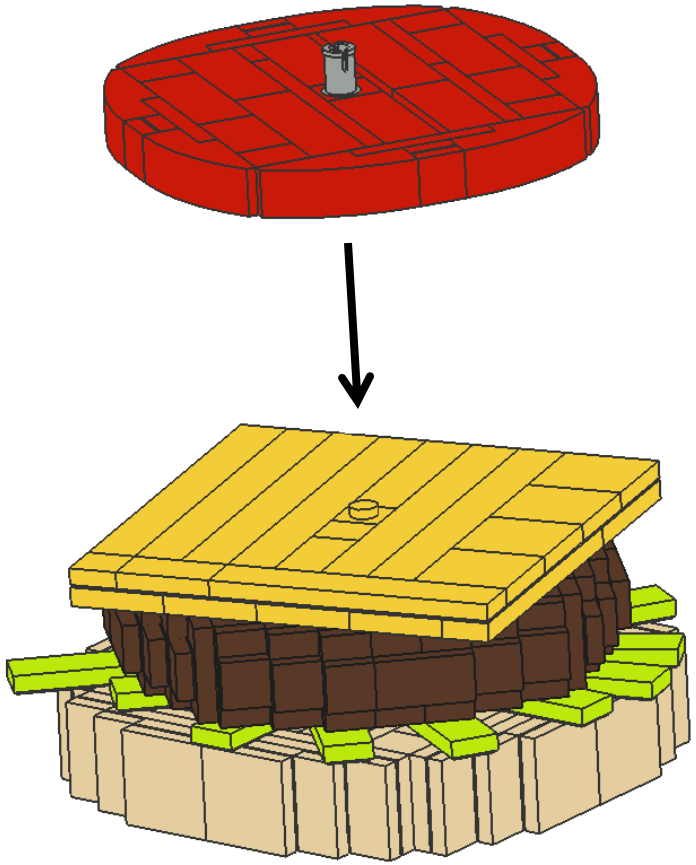

25

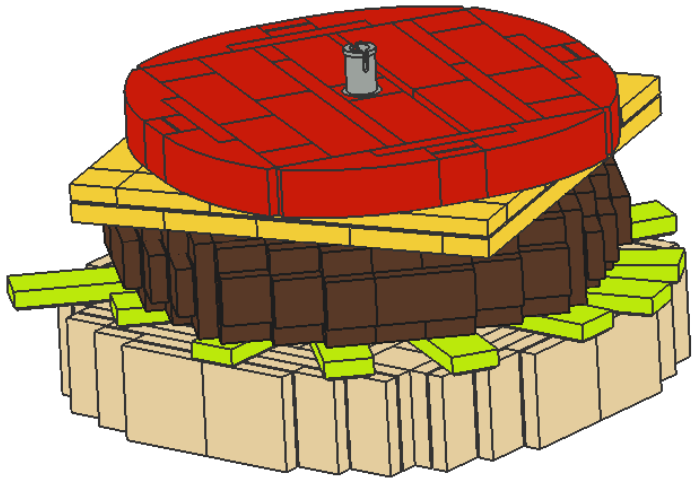

©2014, Cole Edmonson

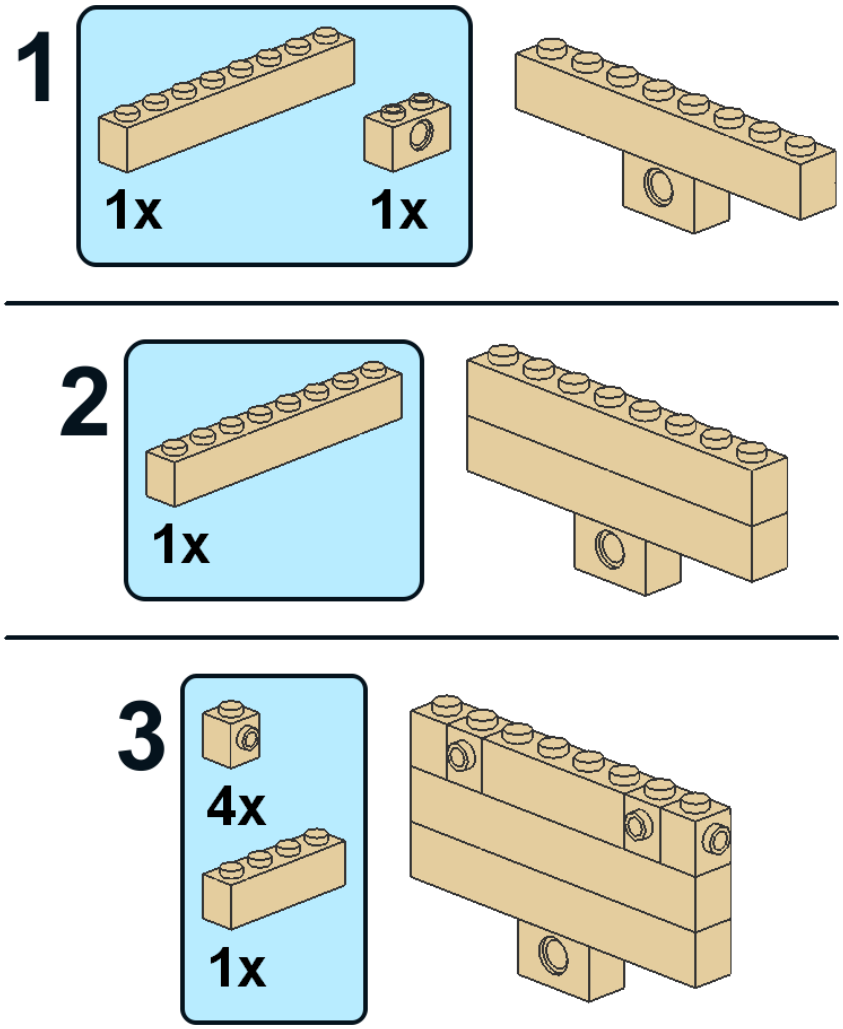

©2014, Cole Edmonson

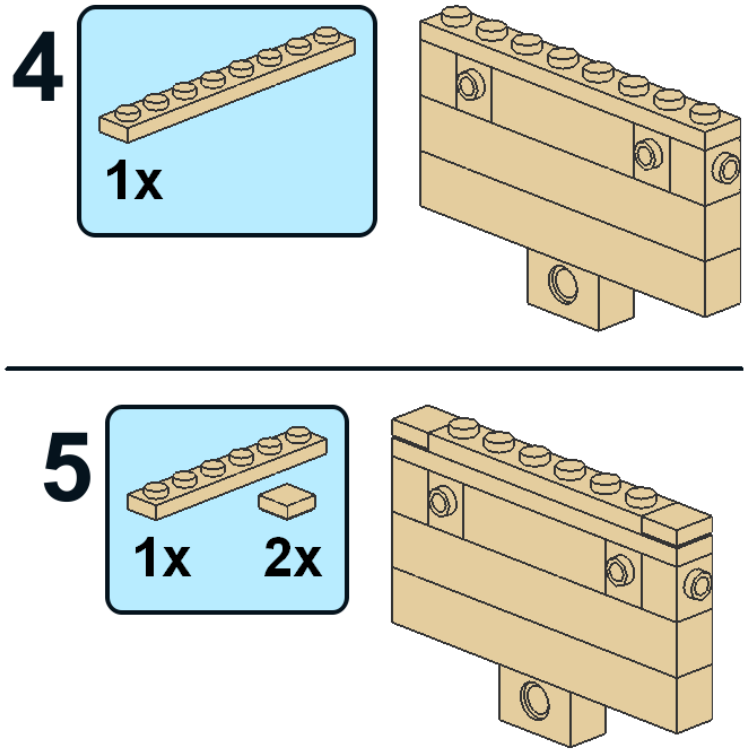

©2014, Cole Edmonson

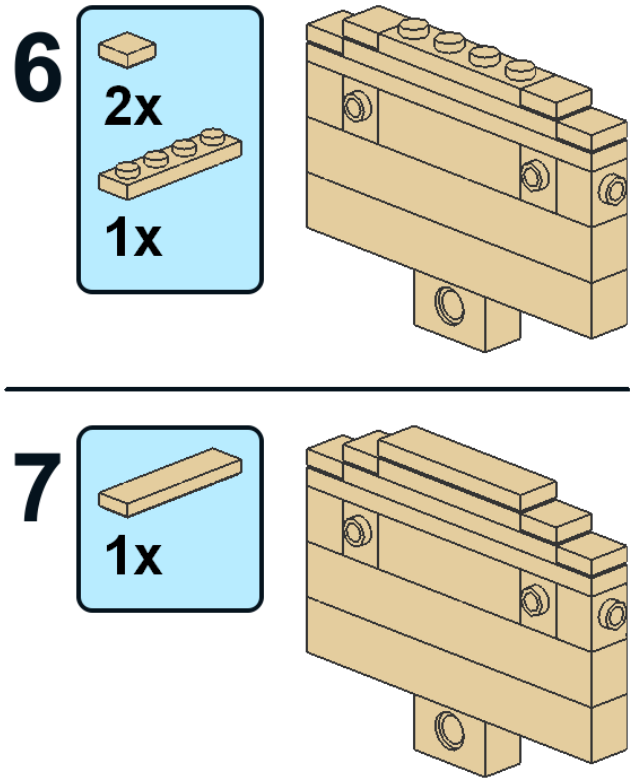

©2014, Cole Edmonson

8

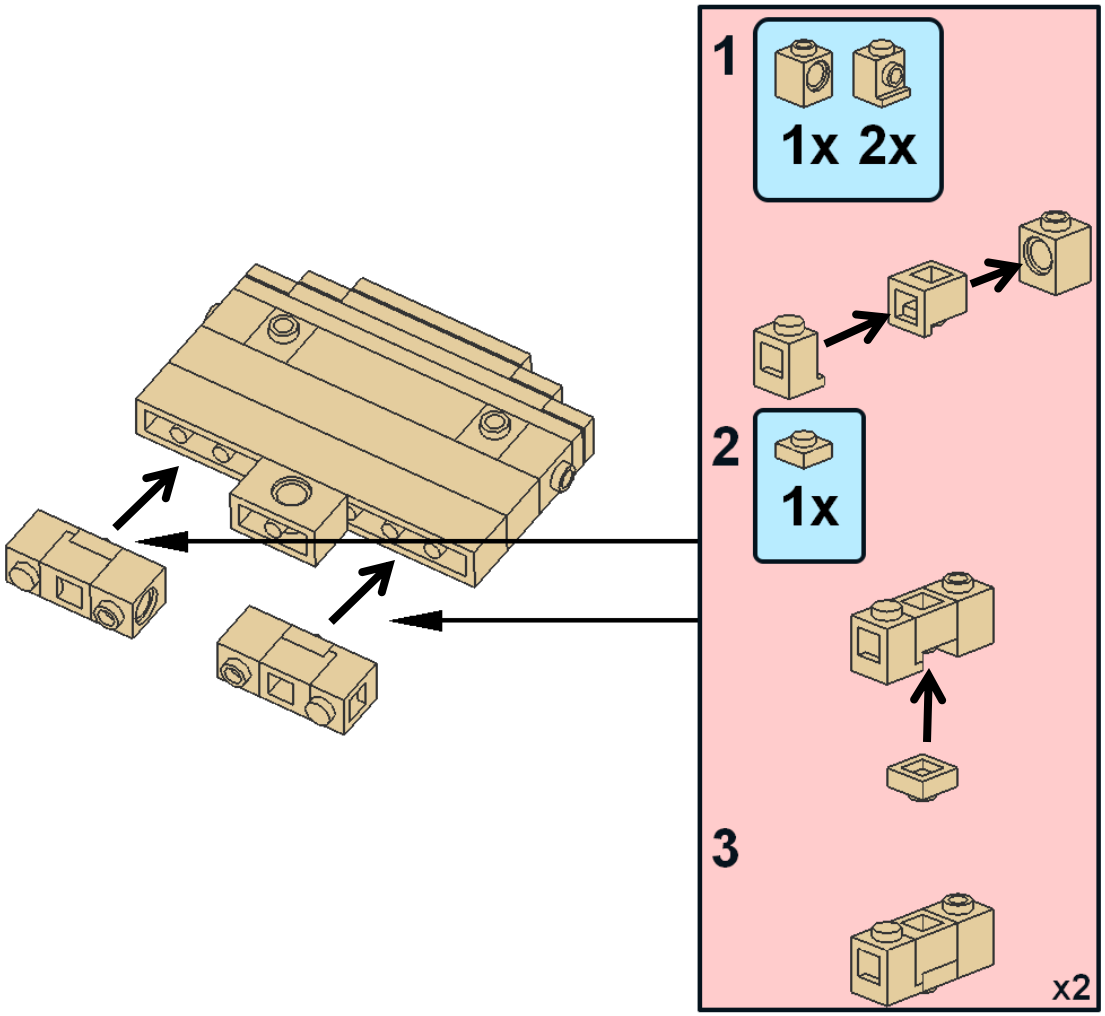

©2014, Cole Edmonson

9

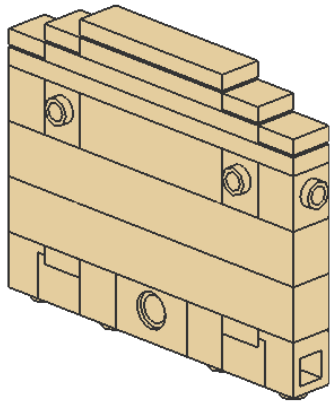

©2014, Cole Edmonson

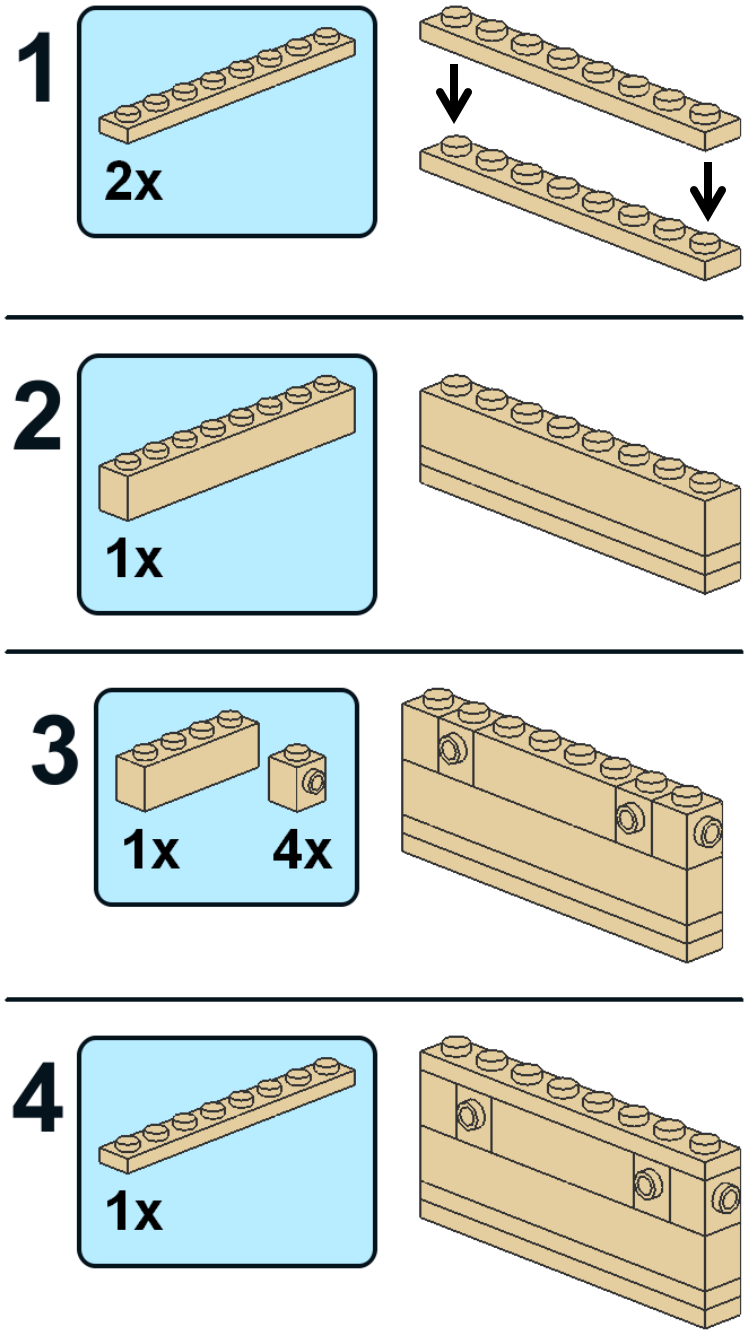

©2014, Cole Edmonson

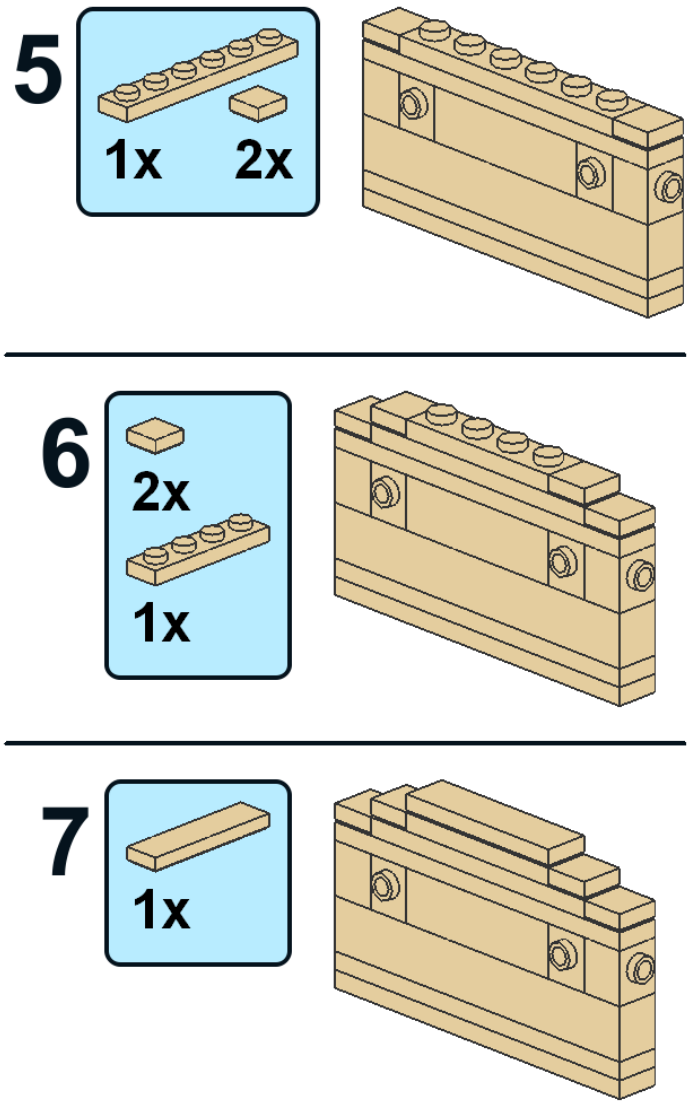

©2014, Cole Edmonson

10

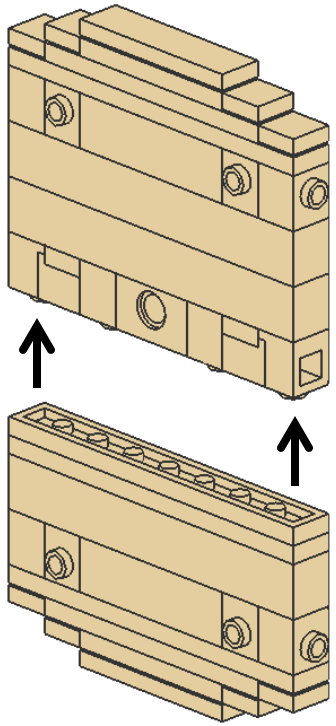

©2014, Cole Edmonson

11

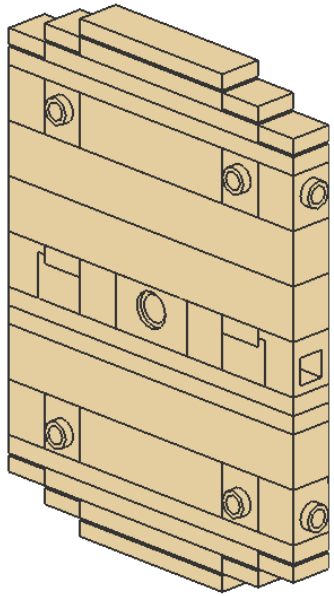

©2014, Cole Edmonson

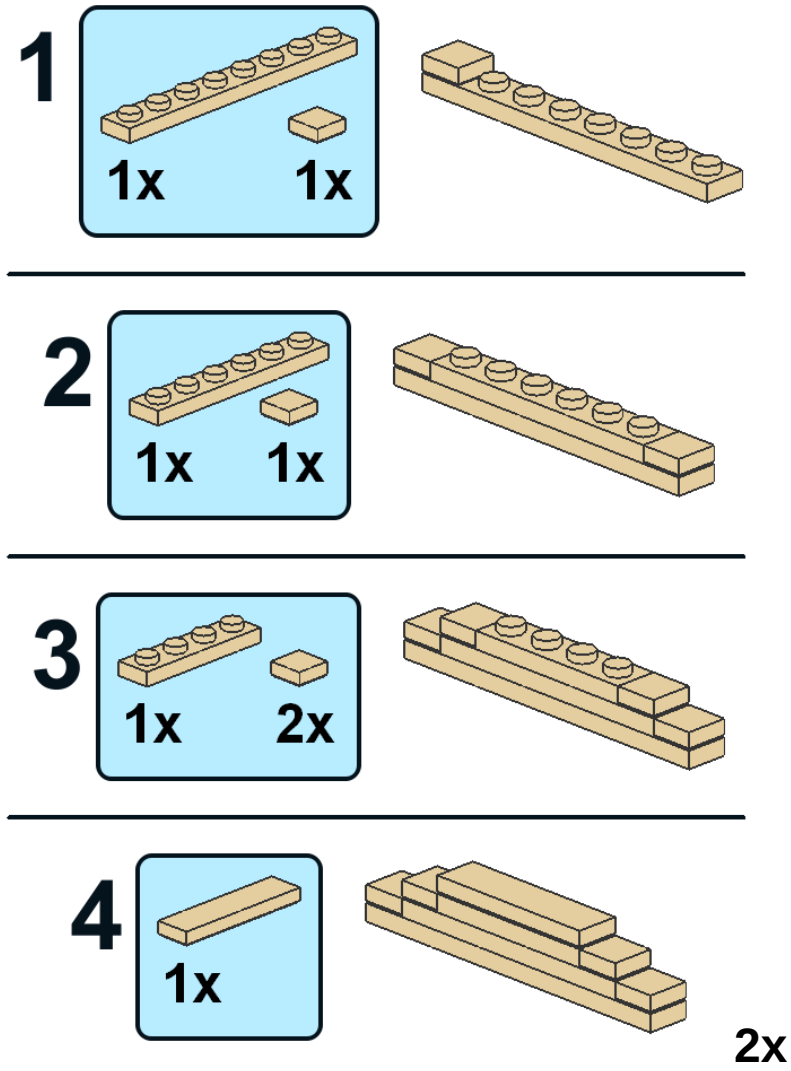

©2014, Cole Edmonson

12

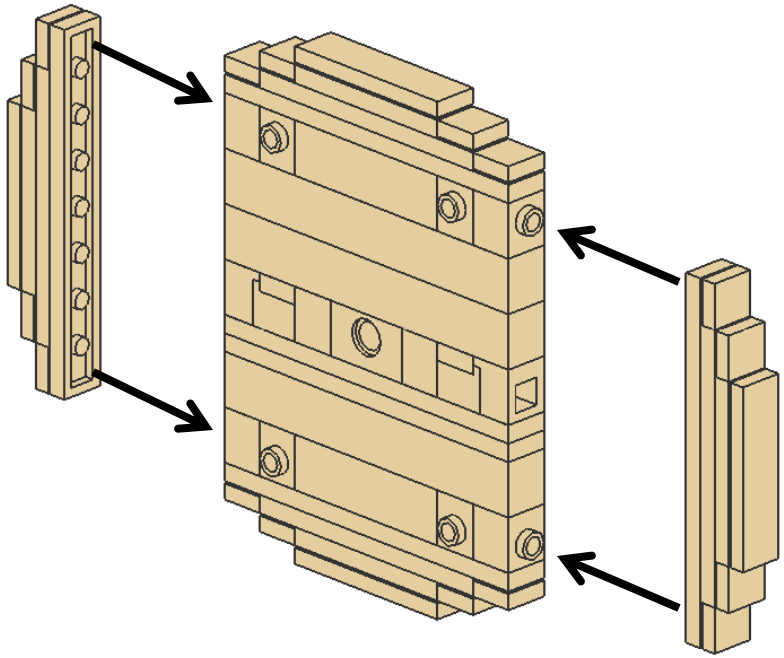

©2014, Cole Edmonson

13

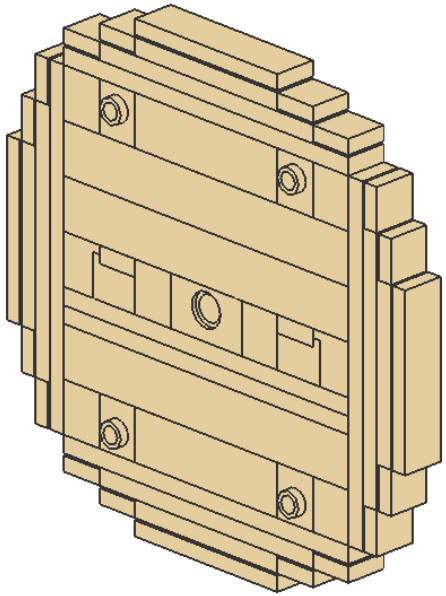

©2014, Cole Edmonson

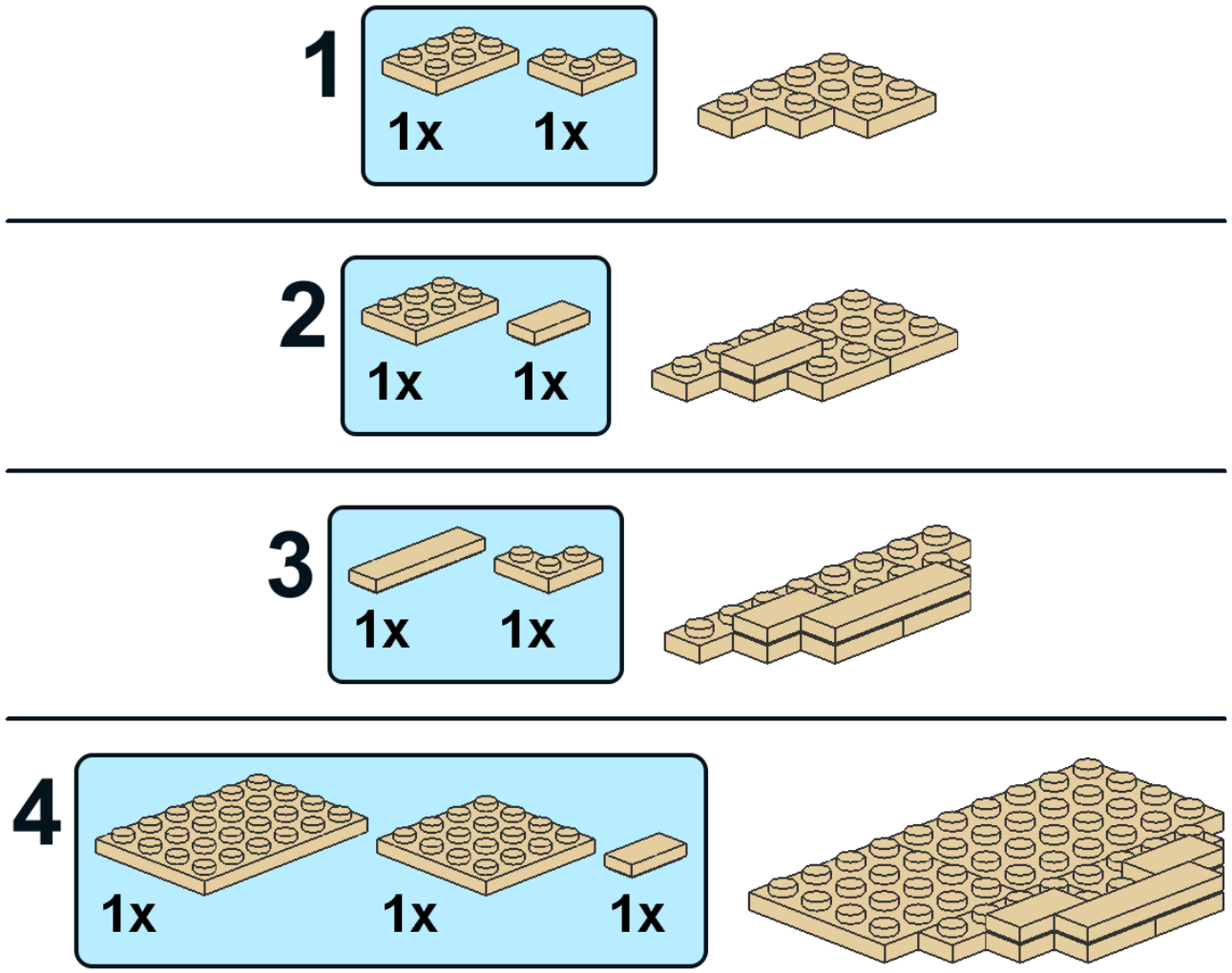

©2014, Cole Edmonson

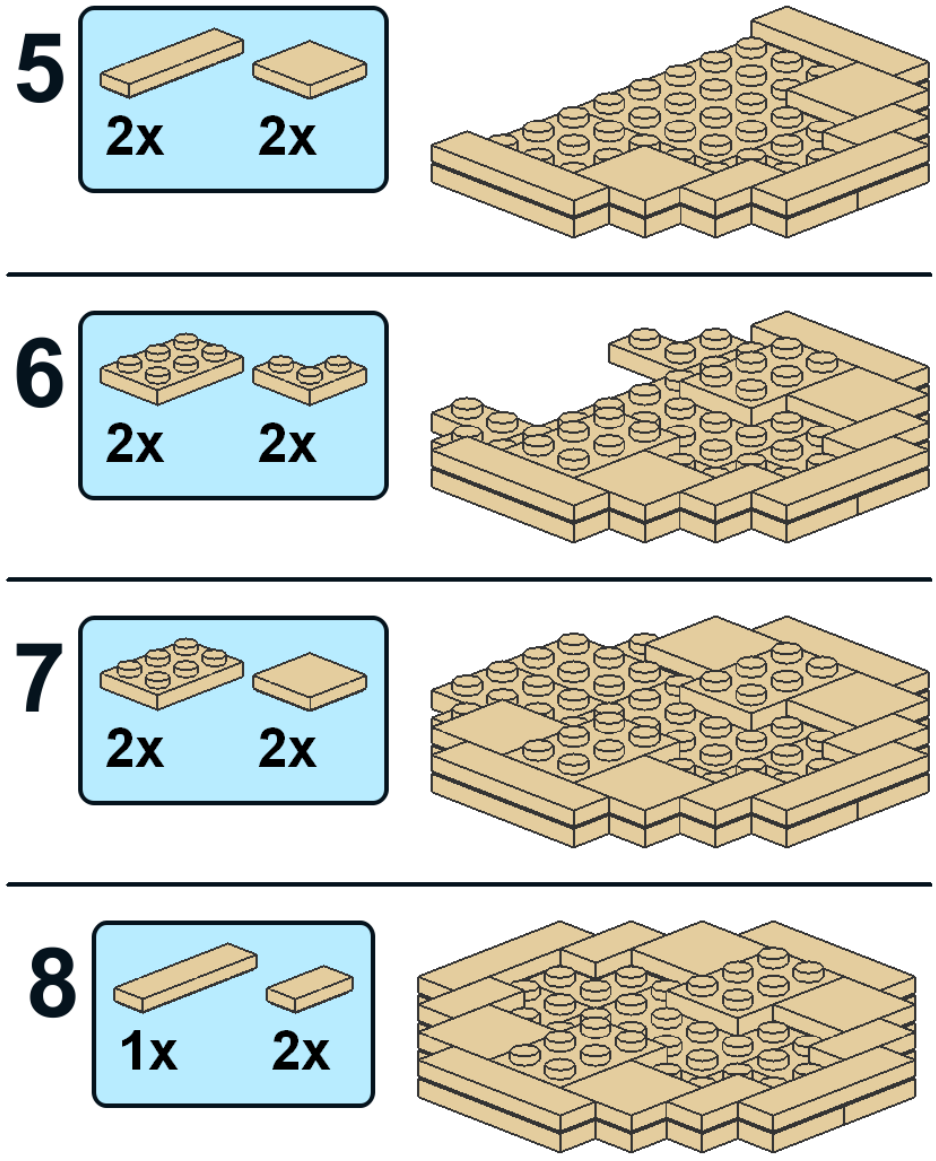

©2014, Cole Edmonson

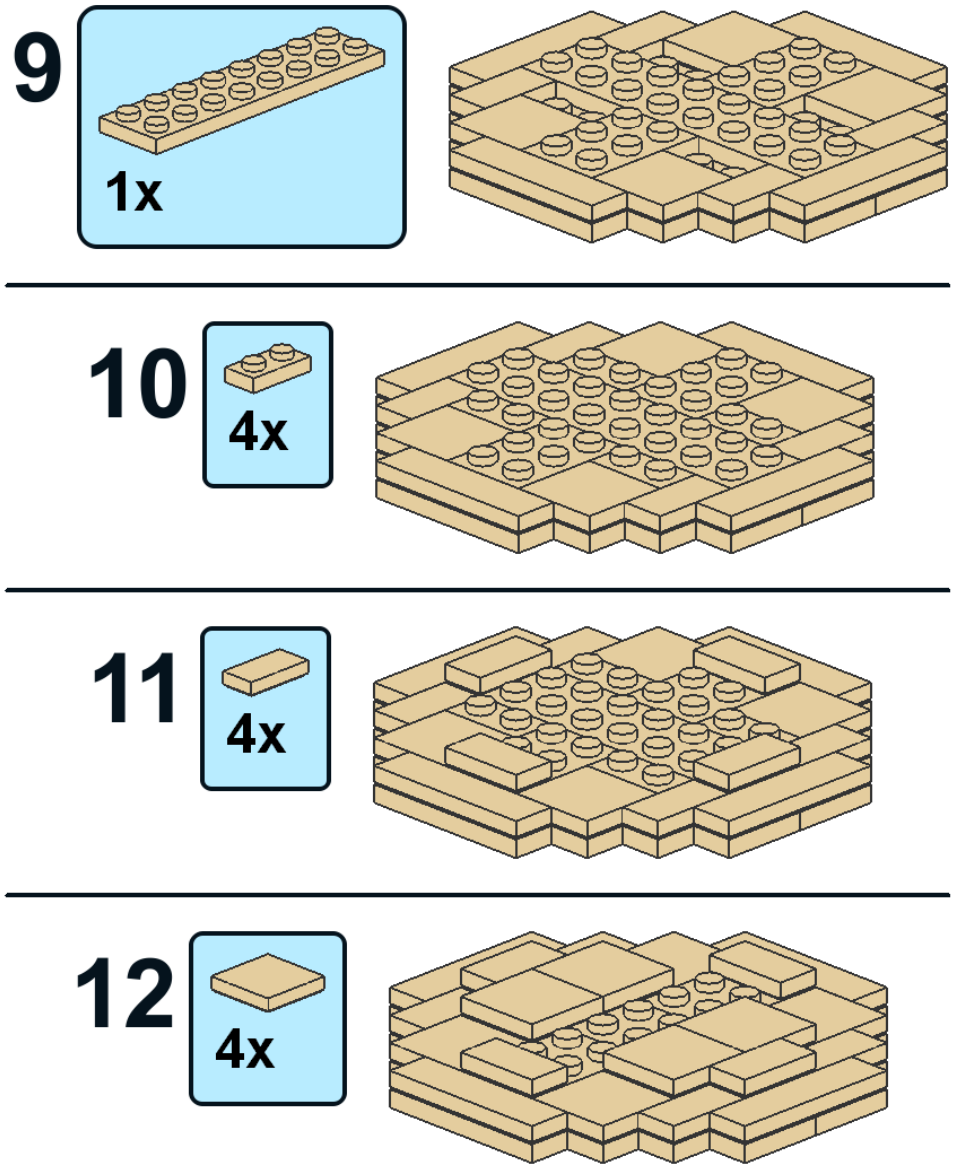

©2014, Cole Edmonson

13

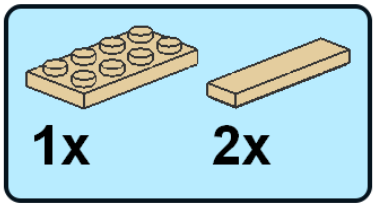

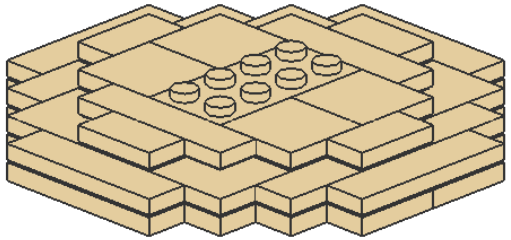

14

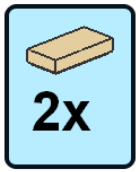

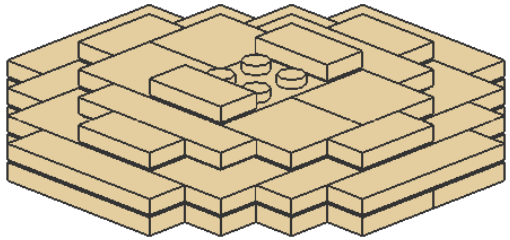

15

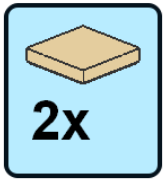

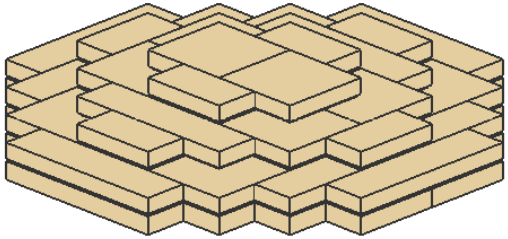

©2014, Cole Edmonson

14

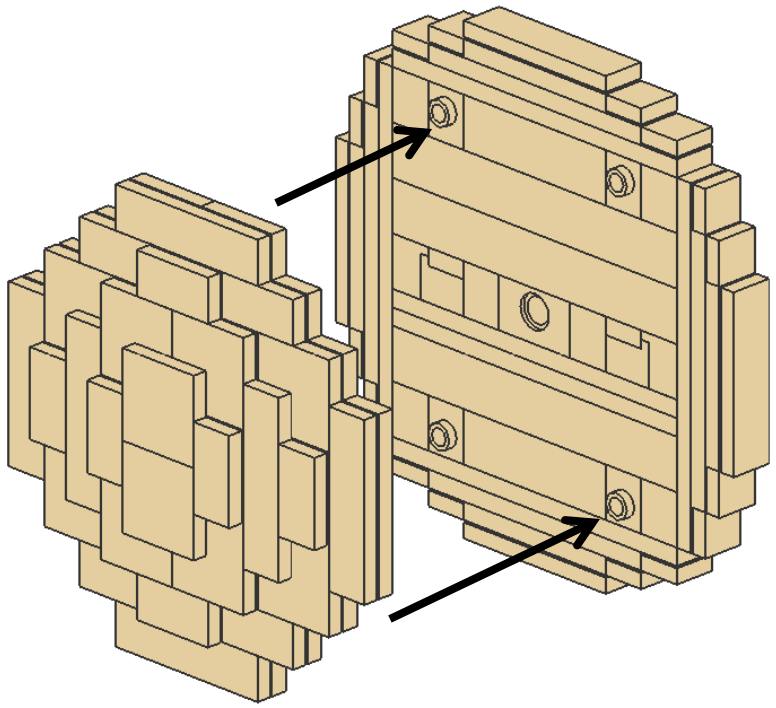

©2014, Cole Edmonson

15

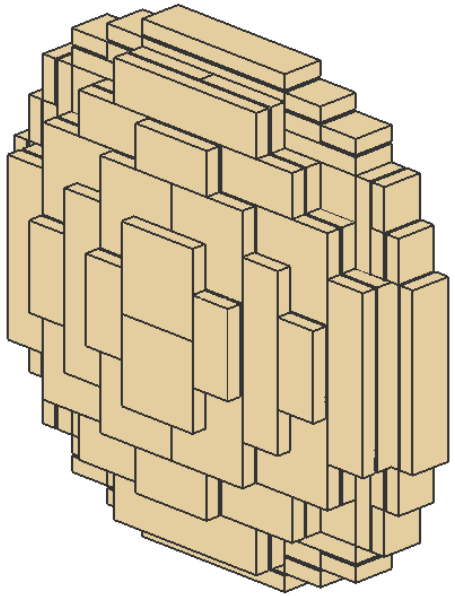

©2014, Cole Edmonson

26

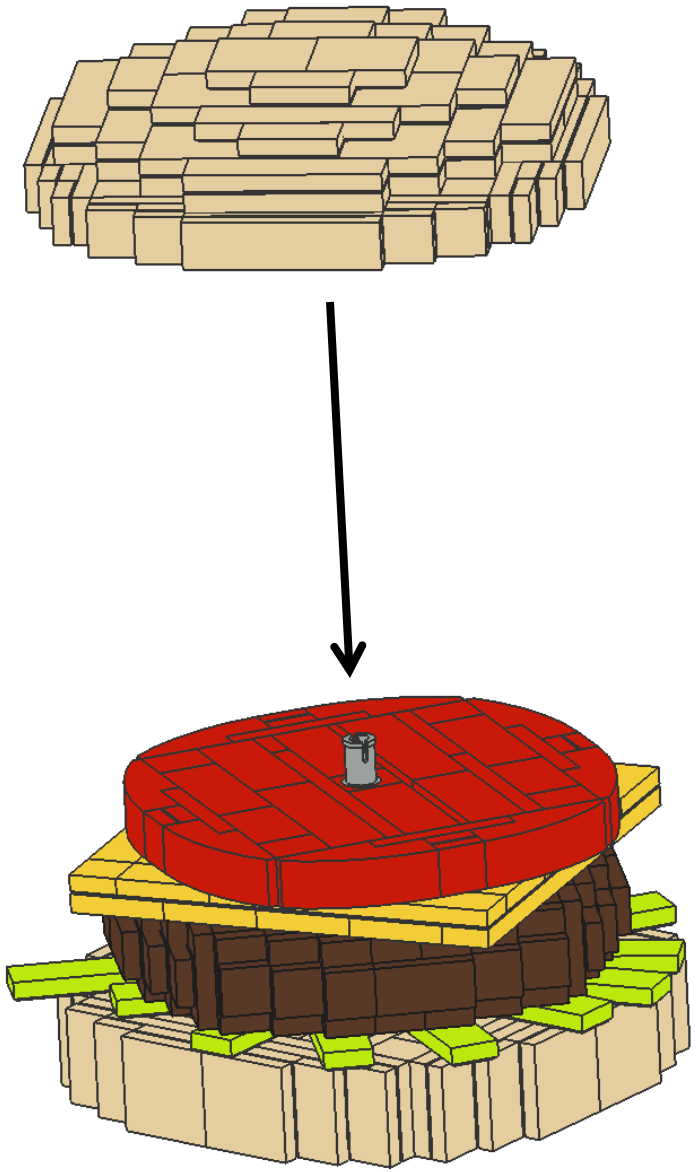

27

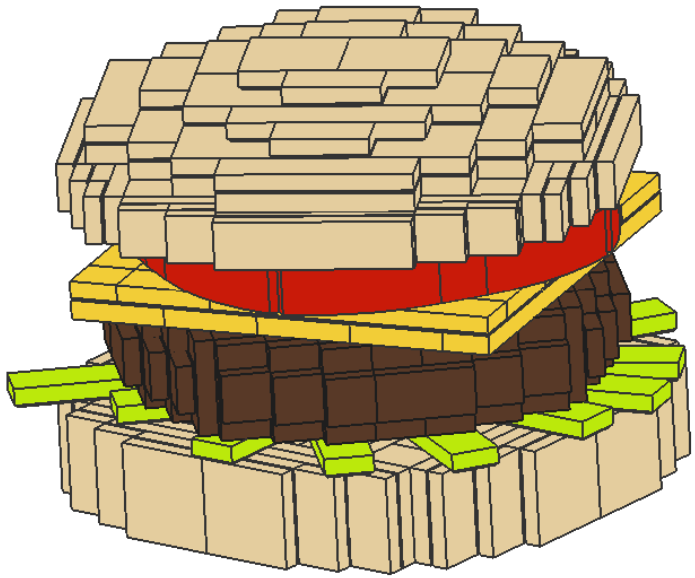

©2014, Cole Edmonson

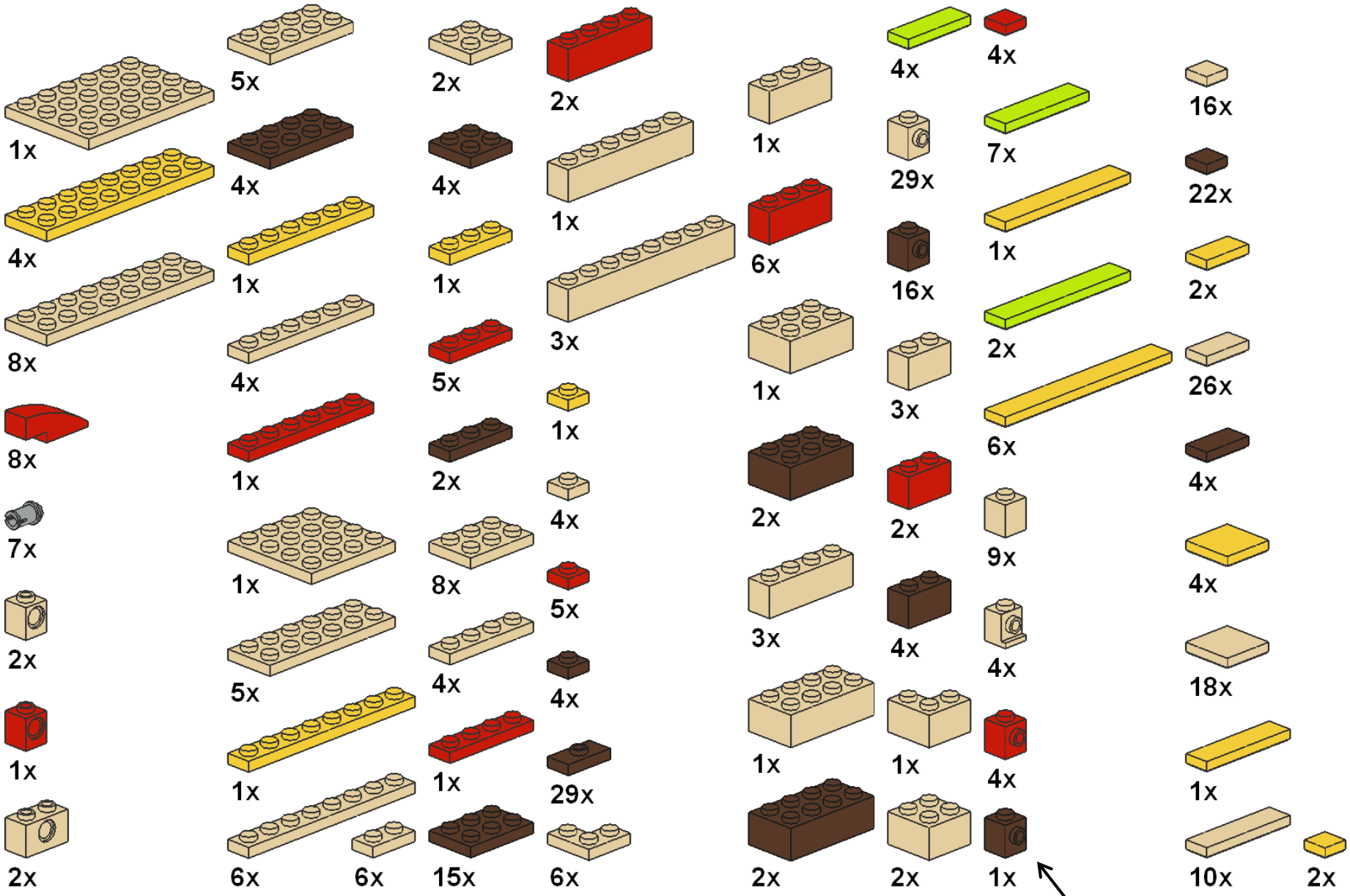

©2014, Cole Edmonson